Non-Contact Safety Switches

CES/CEM

Transponder Coding

More than safety.

EUCHNER

More than safety.

Emil Euchner, the company's founder and inventor of the multiple limit switch, circa 1928.

Around the world – the Swabian specialists in motion sequence control for mechanical and systems engineering.

EUCHNER's history began in 1940 with the establishment of an engineering office by Emil Euchner. Since that time, EUCHNER has been involved in the design and development of switchgear for controlling a wide variety of motion sequences in mechanical and systems engineering. In 1953, Emil Euchner founded EUCHNER + Co., a milestone in the company's history. In 1952, he developed the first multiple limit switch – to this day a symbol of the enterprising spirit of this family-owned company.

Automation – Safety – ManMachine

Today, our products range from electromechanical and electronic components to complex system solutions. With this wide range of products we can provide the necessary technologies to offer the right solution for special requirements – regardless of whether these relate to reliable and precise positioning or to components and systems for safety engineering in the automation sector.
EUCHNER products are sold through a world-wide sales network of competent partners. With our closeness to the customer and the guarantee of reliable solutions throughout the globe, we enjoy the confidence of customers all over the world.

Quality, reliability, precision

Quality, reliability and precision are the hallmarks of our corporate philosophy. They represent concepts and values to which we feel totally committed.
At EUCHNER, quality means that all our employees take personal responsibility for the company as a whole and, in particular, for their own field of work. This individual commitment to perfection results in products which are ideally tailored to the customers' needs and the requirements of the market. After all: our customers and their needs are the focus of all our efforts. Through efficient and effective use of resources, the promotion of personal initiative and courage in finding unusual solutions to the benefit of our customers, we ensure a high level of customer satisfaction. We familiarize ourselves with their needs, requirements and products and we learn from the experiences of our customers' own customers.

EUCHNER – More than safety.

Quality – made by EUCHNER

Contents

Non-Contact Safety Switches CES/CEM

Accessories

Appendix

General information

According to EN 1088, interlocking devices are mechanical or electrical devices which are designed to prevent the operation of a machine element for as long as the movable safety guard is left open.

Non-contact safety switches are interlocking devices which are designed to protect people and machines.
Compared with electromechanical safety switches, they are used if:

- a high level of protection against tampering must be achieved
- extremely hygienic environmental conditions are required (e.g. in the food industry)
- a precise door guide is not possible
- machine doors are subjected to strong vibrations
- a high safety category is determined in the risk analysis

Functional description

The **C**oded **E**lectronic **S**afety switch **CES** manufactured by EUCHNER comprises three components:

- Coded actuator
- Read head
- Evaluation unit

The non-contact safety switches described here operate on the basis of a uniquely electronically coded actuator (transponder).

The name **transponder** is a combination of the two terms **trans**mitter and res**ponder**.
The function of a transponder is easily explained: the transponder (actuator) receives and processes the electromagnetic field from a transceiver (read head), and the data signals are then sent back to the receiver (evaluation unit) as a response depending on the transponder coding.

This transponder technology has been used successfully in electronic immobilizers for many years by almost all automotive manufacturers.
Transponder technology is also used on the non-contact safety switches series CES from EUCHNER and is an advanced solution for a new safety concept.

Power is supplied and data transmitted to the coded actuator using a non-contact, inductive read head. The major advantage of the system is the battery-less actuator technology that will give the user many years of service-free operation.

Every transponder is unique and absolutely secure against tampering.
The configuration of the system can be changed using a "teach-in operation". In service new actuators can be taught very simply. Each delivered actuator possesses a unique electronic coding and so is a unique element in the system used. The code of the actuator cannot be reprogrammed.
Signal transmission between the actuator and the read head is achieved via a homogeneous field. It is permissible to rotate the actuator within the operating distance of the read head.

Thanks to the highly integrated circuits contained in the actuator and the read head, switches with transponder technology can be produced in units of virtually any tiny design.
EUCHNER also supplies read heads and actuators in rectangular and circular designs, with or without plug connectors.

The read head is fastened to the fixed part of the safety guard and is connected to the evaluation unit via a two-core screened cable.
The actuator fastened to the safety guard is moved towards the read head by closing the door. When the switch-on distance is reached, power is supplied to the actuator by the inductive read head and data can be transferred.
The bit pattern read is compared with the code saved in the evaluation unit; if the data matches, the safety outputs are enabled and the door monitoring output OUT (semiconductor output) is also set HIGH.

Actuator and read head have a wide operating distance and a broad hysteresis. Misalignment of the doors will not result in the system switching off unintentionally. If, on the other hand, the actuator is positioned exactly at the limit of the switch-on distance, vibrations at the safety guard will not cause the machine to stop unintentionally.

Polling of the read head, "actuator present," is single-channel and dynamic. All potential faults (e.g. broken cable, short circuit, failure of the actuator) are reliably detected. Thanks to the redundant, diverse design of the evaluation unit in combination with two safety outputs, the evaluation unit enters the safe state with every detectable fault.

Your advantages

- Uniquely coded actuator
  - Every actuator is unique
  - Absolutely secure against tampering
- Homogeneous magnetic field
  - It is possible to rotate the actuator within the operating distance of the read head
- Actuator and read head have a wide operating distance and a broad hysteresis
  - Misalignment of the doors will not result in the system switching off unintentionally
  - Precise door guides are not required
- Fully encapsulated read head and actuator
  - Degree of protection IP 67
  - Can be used in harsh environment
- Dirt on the surface does not reduce the switching distance
- Flush installation in door panel is possible
- No static magnetic field between actuator and read head
  - Metallic parts are not attracted
- Housing materials for actuator and read head
  - Fortron (as standard)
  - PE-HD (housing material resistant to aggressive chemicals, e.g. acids and alkaline)
- Small design of the actuator and read head
  - Cube-shaped
  - Cylindrical
- Read head with M8 plug connector
  - Easy to replace in service
- Safety screws included
  - Protection against tampering
- Approvals from BG, SIBE, UL

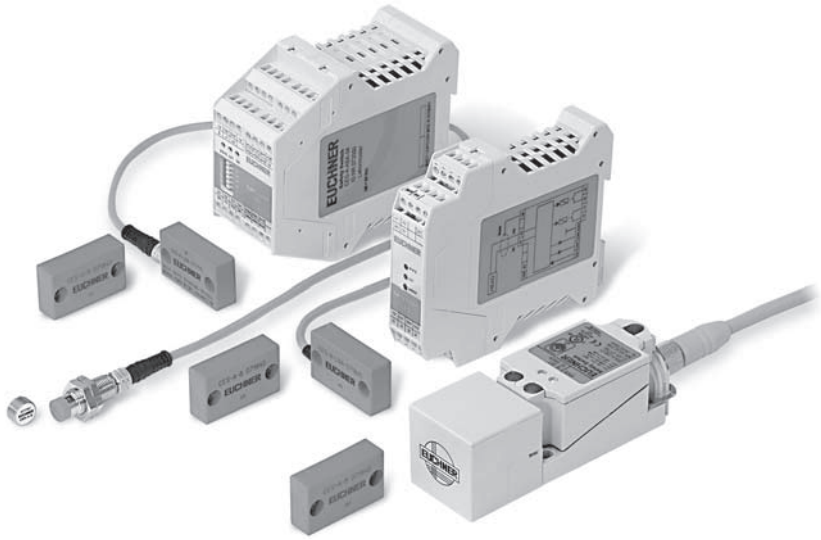

Selection table safety switches CES with relay output

	Evaluation units	Read heads	Actuators	Connection cables
Evaluation units with relay output, IP 20	**CES-A-ABA-01** Page 10 - For 1 read head - Safety category 3 - Switch-on distance 6 mm **CES-A-ABA-01B** Page 10 - For 1 read head - Safety category 3 - Switch-on distance 15 mm  **CES-A-AEA-02B** Page 16 - For 1 ... 2 read heads - Safety category 4 - Switch-on distance 15 mm - Feedback loop/start button **CES-A-AEA-04B** Page 18 - For 1 ... 4 read heads - Safety category 4 - Switch-on distance 15 mm - Feedback loop/start button 	**CES-A-LNA** Page 36 - Cube-shaped design - Fortron housing - PVC/PUR connection cable 	**CES-A-BBA** Page 44 - Cube-shaped design - Fortron housing 	No additional connection cable necessary
		CES-A-LNA Page 36 - Cube-shaped design - Fortron housing - PVC/PUR connection cable 	**CES-A-BDA** Page 46 - Round design - ∅ 20 mm	No additional connection cable necessary
		CES-A-LCA Page 40 - Cube-shaped design - PE-HD housing - PVC connection cable 	**CES-A-BCA** Page 44 - Cube-shaped design - PE-HD housing 	No additional connection cable necessary
		CES-A-LNA-SC Page 38 - Cube-shaped design - Fortron housing - M8 plug connector 	**CES-A-BBA** Page 44 - Cube-shaped design - Fortron housing 	M8 plug connector Connection cable PUR/PVC see page 64
		CES-A-LMN-SC Page 42 - Cylindrical design M12 - M8 plug connector 	**CES-A-BMB** Page 47 - Cylindrical design M12 	M8 plug connector Connection cable PUR/PVC see page 64

Selection table safety switches CES with semiconductor output

	Evaluation unit with integrated read head	Actuators	Connection cables
Evaluation units with semiconductor output, IP 67	**CES-A-C5E-01** Page 26 - Integrated read head - Safety category 3 - Switch-on distance 20 mm **CES-A-C5H-01** Page 26 - Integrated read head - Safety category 4 - Switch-on distance 20 mm 	**Safety door actuator** **CES-A-BBA** Page 44 - Fortron housing 	M12 plug connector PVC connection cable see page 65
		Safety door actuator **CES-A-BCA** Page 44 - PE-HD housing 	M12 plug connector PVC connection cable see page 65
	CES-A-S5H-01 Page 32 - Position sensor - Integrated read head - Safety category 4 - Switch-on distance 20 mm 	**Safety door actuator** **CES-A-BBA** Page 44 - Fortron housing 	M12 plug connector PVC connection cable see page 65
		Position actuator **CES-A-NBA** Page 45 - Fortron housing 	M12 plug connector PVC connection cable see page 65

Selection table safety switches CEM with solenoids

	Evaluation units	Read heads	Actuators	Connection cables
Evaluation units with relay output, IP 20	**CES-A-ABA-01B** Page 10 - For 1 read head - Safety category 3 - Switch-on distance 2 mm 	**CEM-A-LE05K-S2** Page 50 - Locking force 500 N  **CEM-A-LE05R-S2** Page 52 - Without remanence	**CEM-A-BE05** Page 60 	M8 plug connector for solenoid operating voltage see page 62 M8 plug connector for evaluation unit see page 64
	CES-A-AEA-02B Page 16 - For 1 ... 2 read heads - Safety category 4 - Switch-on distance 2 mm - Feedback loop/start button **CES-A-AEA-04B** Page 18 - For 1 ... 4 read heads - Safety category 4 - Switch-on distance 2 mm - Feedback loop/start button 	**CEM-A-LH10K-S3** Page 54 - Locking force 1000 N  **CEM-A-LH10R-S3** Page 56 - Without remanence	**CEM-A-BH10** Page 61 	M8 plug connector for solenoid operating voltage see page 62 M8 plug connector for evaluation unit see page 64 M8 plug connector for external LED indicator see page 63

Evaluation unit CES-A-ABA...

- **Housing for DIN rail mounting, IP 20**
- **Relay output**
- **1 read head can be connected**

Functional description

The **C**oded **E**lectronic **S**afety switch **CES** comprises three components:

- Coded actuator
- Read head
- Evaluation unit

The evaluation unit CES-A-ABA-01 is suitable for the direct connection of a read head, i.e. in each case, the code from only one actuator is read and processed.
The teaching of other actuators can be initiated with a teach-in operation. The teach-in operation can be performed up to 8 times with a new actuator; the actuator from the last teach-in is always the valid actuator. The evaluation unit in the DIN rail housing, degree of protection IP 20, is suitable for installation in the control cabinet.

The two-core connection cable to the evaluation unit is hard-wired to the read head or can be plugged in using a round M8 plug connector. In this way, the wiring work is reduced to an absolute minimum.

The read head is fastened to the fixed part of the safety guard and is connected to the evaluation unit via a two-core screened cable.
The actuator fastened to the movable part of the safety guard is moved towards the read head by closing the door. When the switch-on distance is reached, power is supplied to the actuator by the inductive read head and data can be transferred.

The bit pattern read is compared with the code saved in the evaluation unit; if the data matches, the safety outputs (relay output) are enabled and the door monitoring output OUT (semiconductor output) is also set HIGH.
Due to the combination of dynamic polling of the actuator and the redundant, diverse design of the safety electronics with the two safety outputs, the evaluation unit will enter the safe state with every detectable fault.
When the safety guard is opened, the safety outputs switch off the safety circuit and the door monitoring output (OUT) is switched LOW. The state of the safety outputs is monitored internally by positively driven NC contacts (relay output).
If an internal fault occurs in the evaluation unit, the safety circuit is switched off, the diagnostic output (ERROR) is set HIGH and the ERROR LED illuminates red.

The safety contacts on the safety switch CES can switch currents from 1 mA to 6 A. Since small currents can be switched, the user has the option of connecting the safety switch CES directly to a safe control system.
Safe control systems will become increasingly important as technology progresses.

With a switching capacity of DC 24 V / 6 A, the evaluation unit can be connected directly to the majority of power contactors, without further coupling modules.

Your advantages

- Evaluation unit teach-in function
  - New actuator teach-in can be performed without any other equipment
  - The number of teach-in operations is restricted to eight to provide security against tampering
- Two redundant relay outputs (safety outputs) with internally monitored contacts, suitable for:
  - Safety category 3 according to EN 954-1 (according to BG)
  - Safety category 4 according to EN 954-1 for monitoring short circuits of safety outputs (according to SIBE)
- Dynamic data transmission to the read head
  - All faults (e.g. broken cable, short circuit, failure of the actuator) are reliably detected
  - High safety due to dynamic performance
- Suitable for connection to a safe control system with or without pulse signals
- Several evaluation units can be connected in series
  - Suitable for monitoring systems with several safety guards
- Switching capacity DC 24 V / 6 A
  - Direct connection to power contactor possible without extra coupling modules
- Self-test without opening the safety guard
- Monitoring output available
  - Control system can poll the state of the safety guard
- Fault diagnostics possible using LED indicator
- Coded plug-in terminals
  - Avoidance of faults in service
- Large operating distance of 6 mm (CES-A-ABA-01) and 15 mm (CES-A-ABA-01B) with additional hysteresis
  - Large mechanical tolerances possible for door guide
- Approvals from BG, UL, SIBE

Evaluation unit CES-A-ABA...

- **Housing for DIN rail mounting, IP 20**
- **Relay output**
- **1 read head can be connected**
- **In combination with read head CES-A-L... and actuator CES-A-B..**

Dimension drawing

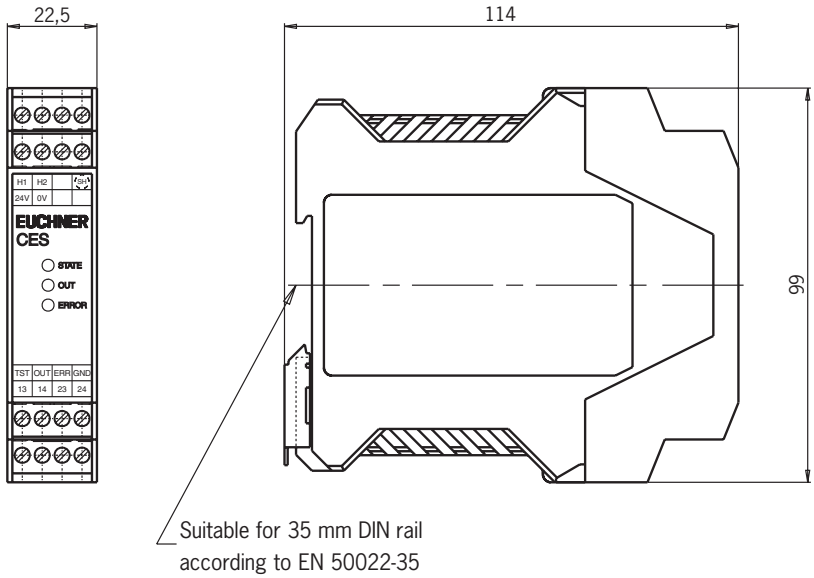

Switching characteristics

2 safety outputs (relay outputs)
1 door monitoring output (semiconductor output, not a safety output)

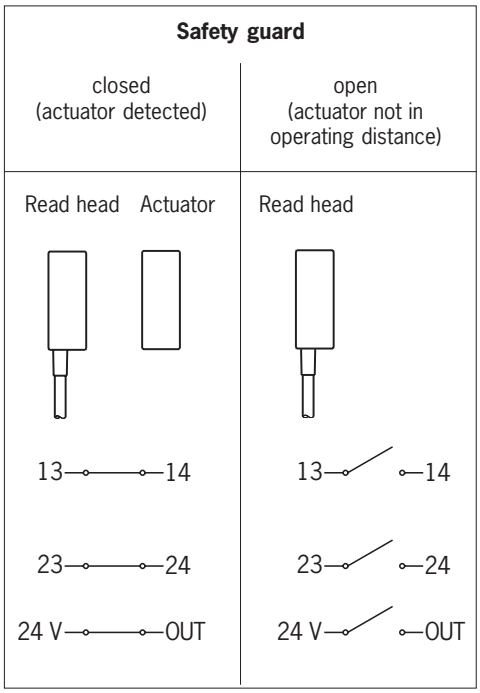

Notes on the electrical connection

- All the electrical connections must either be isolated from the mains supply by a safety transformer according to EN/IEC 61558 with limited output voltage in the event of a fault, or by other equivalent isolation measures.
- The plug-in and coded terminals on the evaluation unit enable the cable connections to be pre-assembled and so facilitate rapid final installation.
- The H1/H2, ERR and OUT connections are not short circuit-proof.
- If a common power supply is used, all the inductive and capacitive loads (e.g. contactors) connected to the power supply must be connected to appropriate interference suppression units.

Notes on installation

The evaluation unit must be mounted in a control cabinet with a minimum degree of protection of IP 54. A snap-in element on the back of the evaluation unit is used for fastening to the standard rail (35 mm DIN rail).

Safety precautions

- The evaluation unit has a redundant switching design with self-monitoring. This means that the safety system is still effective even if a component fails.
- The door monitoring output OUT is not fail-safe (not a safety output).
- To ensure safety, it is imperative that the safety outputs 13/14 and 23/24 are connected.

Technical data

Parameters	Value			Unit
	min.	typ.	max.	
Housing material	Plastic PA6.6			
Dimensions	114 x 99 x 22.5			mm
Weight	0.2			kg
Ambient temperature at U_B = DC 24 V	0	-	+55	°C
Degree of protection to IEC/EN 60529	IP20			
Degree of contamination / material group	2 / II			
Mounting	35 mm DIN rail according to EN 50022-35			
Number of read heads	1 read head per evaluation unit			
Connection (plug-in screw terminals/coded)	0.14	-	2.5	mm^2
Operating voltage U_B (regulated, residual ripple < 5 %)	21	24	27	V DC
For the approval according to cULus the following applies	Operation with UL-class 2 power supply only			
Current consumption (with relay energized)		150		mA
External fuse (operating voltage U_B)	0.25		8	A
Safety outputs	2 safety relays with positively driven contacts			
Switching current (relay outputs) [1] - At switching voltage 0.1 ... 60 V - At switching voltage 10 ... 30 V	 1 10	 - -	 300 6000	 mA mA
Switching load according to cULus	Max. AC 30 V, class 2 / max. DC 60 V, class 2			
External fuse (safety circuit) according to IEC/EN 60269-1	6 AgG			
Utilization category according to IEC/EN 60947-5-2	AC-12 60V 300mA 50Hz / DC-12 60V 300mA / DC-12 30V 6A AC-12 30V 6A / AC-140 30V 2A 50Hz / DC-13 24V 4A			
Safety category according to EN 954-1	4 according to SIBE (on monitoring of short circuits across the relay output contacts or separate laying of the cable for the safety outputs)			
Classification according to IEC/EN 60947-5-3	PDF-M			
Rated insulation voltage U_i	-	-	63	V
Rated impulse withstand voltage U_{imp}	-	-	1.5	kV
Resilience to vibration	According to IEC/EN 60947-5-2			
Mechanical operating cycles (relays)	10×10^6			
Switching delay from state change[2]	-	-	180	ms
Fault detection time [3]	-	-	500	ms
Difference time (between the switching points of the two relays)	-	-	120	ms
Ready delay [4]			3	s
Dwell time [5]	0.5	-	-	s
Switching frequency [7]	-	-	1	Hz
Monitoring outputs (diagnostics ERR, door monitoring contact OUT, semiconductor output, p-switching) [6] - Output voltage - Max load	 0.8 x U_B -	 - -	 U_B 20	 V DC mA
Test input LOW HIGH	0 15	- -	2 U_B	V DC V DC
EMC protection requirements	As per IEC/EN 60947-5-3			
LED indicators	STATE OUT ERROR	green LED: flashing: yellow LED: red LED:	Normal operation Teach-in operation Actuator detected - Test input activated - Internal electronics fault - Invalid teach-in operation	

1) If a switching current > 300 mA is switched once using the relay outputs, it is no longer possible to reliably switch small currents (< 10 mA) due to the contact erosion on the gold contacts.
2) Corresponds to the risk time according to EN 60947-5-3. This is the maximum switch-off delay for the safety outputs following removal of the actuator.
3) The fault detection time is the time for the detection of an internal fault in the device. At least one of the relay outputs is opened safely. The welding of one of the relay contacts is only detected after the safety guard is opened.
4) After the operating voltage is switched on, the relay outputs are switched off and the door auxiliary contact is set LOW during the ready delay.
5) The dwell time of an actuator inside and outside the operating distance must be at least 0.5 s to ensure reliable detection of internal faults in the evaluation unit (self-monitoring).
6) Not short circuit-proof
7) In case of monitoring with feedback loop, the actuators must remain outside the operating distance, e.g. with a door open, until the feedback circuit is closed.

Ordering table

Series	Switch-on distance S_{a0} [mm]	Number of read heads	Item	Order No.
CES-A-ABA...	6	1	CES-A-ABA-01	071 850
	15	1	CES-A-ABA-01B [8]	083 513

8) No UL approval

Wiring and block diagram CES-A-ABA...

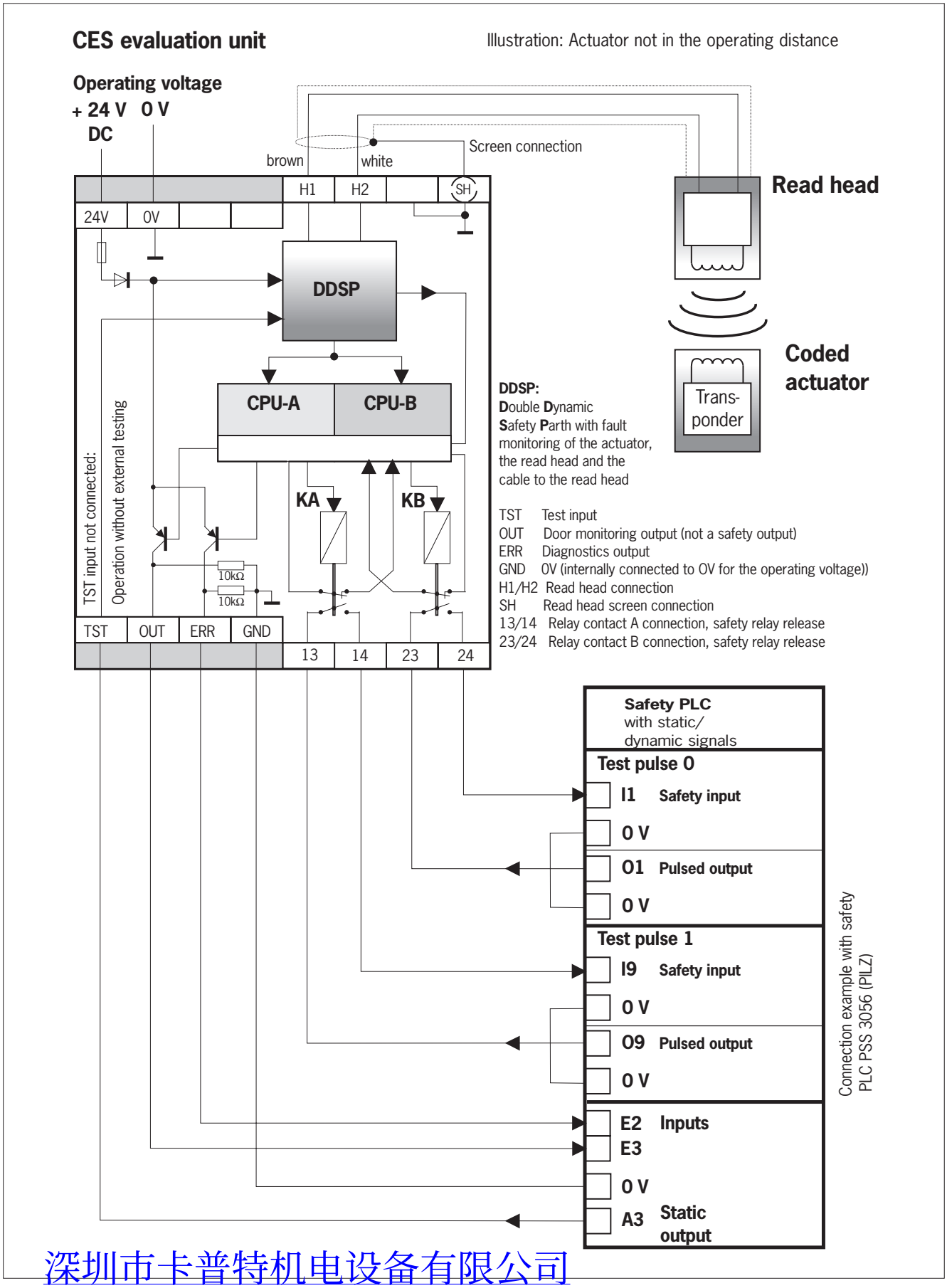

System functions evaluation unit CES-A-ABA...

Teach-in function for actuator

The actuator must be allocated to the evaluation unit using a teach-in function before the system forms a functional unit.
During a teach-in operation, the safety outputs and the door monitoring output are LOW, i.e. the system is in the safe state.

Teach-in function for first actuator
(default setting on delivery)

① Apply the operating voltage to the evaluation unit
- green LED flashes fast (approx. 4 Hz)

② Move actuator to the read head
(Observe distance < S_{a0})
- teach-in operation starts, green LED flashes slowly (approx. 1 Hz)

③ Teach-in operation completed (after 60 seconds)
- green LED goes out

④ To activate the actuator code from the teach-in operation in the evaluation unit, the operating voltage must then be switched off for min. 10 seconds.

Teach-in function for a new actuator

① Apply the operating voltage to the evaluation unit

② Move new actuator to the read head
(Observe distance < S_{a0})
- teach-in operation starts, green LED flashes (approx. 1 Hz)

③ Teach-in operation completed (after 60 seconds)
- green LED goes out, new code saved, old code deactivated

④ To activate the new actuator code from the teach-in operation in the evaluation unit, the operating voltage must then be switched off for min. 10 seconds.

Notes
- Repeated teach-in of the same actuator on the same evaluation unit is not possible
- The number of teach-in operations on one evaluation unit is limited to a maximum of 8
- The evaluation unit can only be operated with the last actuator taught
- A teach-in operation is invalid if:
  - The teach-in operation is cancelled before the green flashing LED goes out
  - The power supply is switched off during the teach-in operation
- When switching on the evaluation unit (application of operating voltage), the STATE LED signals the number of possible remaining teach-in operations (see system status table)

Warning
- After the eighth teach-in operation or if an "old" actuator is placed against the actuator head, the system automatically switches to the teach-in mode. In both cases, a teach-in operation with a duration of 60 seconds is started; however, the last actuator code remains active (see system status table) in the memory - a new code is not taught.

Function test (self-test)

On electromechanical safety switches or magnetic switches, the function test can be performed by cyclically opening the safety guard. From safety category 2, according to EN 60204-1 : 1997 (sec. 9.4.2.4), a function test must be performed on the entire safety system on start-up or after defined intervals.
The testing of the internal function of the safety switch CES is not necessary because the device monitors itself in real time. Wear on an output contact (relay output) is detected by the device at the latest the next time the safety guard is opened. A short circuit in the output cable is not detected by the device. In addition, the entire safety circuit can be tested without opening the safety guard.

For this purpose, the opening of the safety guard can be simulated by applying DC 24 V to the test input TST.
The safety outputs are switched off, enabling testing of the complete safety circuit. The diagnostic output ERR on the evaluation unit is also set HIGH as a monitoring function.
When the test input TST is reset, the evaluation unit resets the diagnostic output ERR to LOW, the red LED switches off and the safety outputs are switched on again. This permits self-testing of the safety system without opening the safety guard.
In the *Manual start* operating mode, the start button must be pressed again to start the system.

Evaluation unit CES-A-AEA...

- **Housing for DIN rail mounting, IP 20**
- **Relay output**
- **2 or 4 read heads can be connected**

Functional description

The **C**oded **E**lectronic **S**afety switch **CES** comprises three components:

- Coded actuator
- Read head
- Evaluation unit

Based on the concept of the safety switch CES-A-ABA..., the evaluation units described in this chapter have the option of connecting 1...2 or 1...4 read heads. As a result, up to four safety guards can be monitored. The evaluation unit also has connection terminals for a start button and for the feedback loop for monitoring power contactors. The start button and the feedback loop are monitored for short-circuits.
The following settings can be made optionally using DIP switches on the evaluation unit:

- Number of read heads 1...2 or 1...4
- Manual or automatic start
- Operation with or without feedback loop

The configuration of the entire system can be changed as often as required using a "teach-in operation". After appropriate preparations (fitting a jumper to the evaluation unit), a new actuator can also be taught-in as often as required in service.

The non-contact safety switch CES-A-AEA... has a relatively large operating distance of 15 mm. Compared with mechanical safety switches, the assembly of the unit is much easier and the need for precision in the door rails is also reduced considerably. Therefore the assembly and maintenance costs are much lower. The two-core connection cable to the evaluation unit is hard-wired to the read head or can be plugged in using a round M8 plug connector. In this way, the wiring work is reduced to an absolute minimum.

The read heads are fastened to the fixed part of the safety guard and are each connected to the evaluation unit via a two-core screened cable. The actuator fastened to the movable part of the safety guard is moved towards the read head by closing the door. When the switch-on distance is reached, power is supplied to the actuator by the inductive read head and data can be transferred.
The bit pattern read is compared with the code saved in the evaluation unit. If the data match, the door monitoring output O1...O2 or O1...O4 (semiconductor output) on the related read head is set HIGH. If all data for all read heads activated match, the safety outputs (relay outputs) are then enabled. The OUT LED illuminates.
Due to the combination of dynamic polling of the actuators and the redundant, diverse design of the safety electronics with the two safety outputs, the evaluation unit will enter the safe state with every conceivable fault.

When a safety guard is opened, the safety outputs switch off the safety circuit and the OUT LED goes out. The state of the safety outputs is monitored internally by positively driven NC contacts (relay output). Independent of the switching state of the safety circuit, the position of all safety doors can be polled via the outputs O1...O2 or O1...O4.
If an internal fault occurs in the evaluation unit, the safety circuit is switched off, the diagnostic output (DIA) is set HIGH and the DIA LED illuminates red.

The start button is also monitored. This is achieved by evaluating the falling edge of the start signal. In this way it is not possible for a signal continuously present on the input of the evaluation unit (e.g. stuck button contact) to result in the automatic start of the system.
The evaluation unit provides the option of monitoring power contactors connected in series.
The evaluation unit can only be started with the feedback loop closed. A welded contactor contact in the release path will thus be detected when a start request is made.

The safety contacts on the new evaluation unit can switch switching currents from 1 mA to 6 A. Since small currents can be switched, the user has the option of connecting the safety switch CES directly to a safe control system. Safe control systems will become increasingly important as technology progresses.

With a switching capacity of DC 24 V / 6 A or AC 230 V / 1.5 A, the evaluation unit can be connected directly to the majority of power contactors, without further coupling modules.

With its new safety switch CES, EUCHNER has introduced an integrated solution on the market. With a single system, the user can realize such applications as the monitoring of safety guards, wiring, evaluation and even the monitoring of externally connected devices. The user thus achieves maximum safety at a reasonable cost without the need for further equipment, e.g. emergency-stop switchgear.

Due to the internal design of the device and the monitoring facility for the external connected devices, the non-contact safety switch CES-A-AEA... can be used for the highest safety requirements of safety category 4 according to EN 954-1 with approval from BG and SIBE Switzerland.

Your advantages

- Evaluation units for the connection of 1 ... 2 or 1 ... 4 read heads
  Selectable via DIP switches:
  - Number of read heads (1...4)
  - Manual or automatic start
  - Operation with or without a feedback loop for monitoring power contactors
- Monitored start button and feedback loop
  - Short circuits are reliably detected
- Evaluation unit teach-in function
  - Teach-in of a new actuator using simple aids (fitting a jumper to the evaluation unit)
  - Unlimited number of teach-in operations possible
- Two redundant relay outputs (safety outputs) with internally monitored contacts, suitable for:
  - Safety category 4 according to EN 954-1 (according to BG and SIBE)
- Dynamic data transmission to the read head
  - All faults (e.g. broken cable, short circuit, failure of the actuator) are reliably detected
  - High safety due to dynamic performance
- Suitable for connection to a safe control system with or without pulse signals
- Several evaluation units can be connected in series
  - Suitable for monitoring systems with several safety guards
- Switching capacities DC 24 V / 6 A or AC 230 V / 1.5 A
  - Direct connection to power contactor possible without extra coupling modules
- Self-test without opening the safety guard
- Monitoring output available
  - Control system can poll the state of the safety guard
- Fault diagnostics possible using LED indicator
- Large operating distance and 15 mm with additional hysteresis
  - Large mechanical tolerances possible for door guide
- Approvals from BG, UL, SIBE

Evaluation unit CES-A-AEA-02B

- **Housing for DIN rail mounting, IP 20**
- **Relay output**
- **2 read heads can be connected**
- **In combination with read head CES-A-L... and actuator CES-A-B..**

Dimension drawing

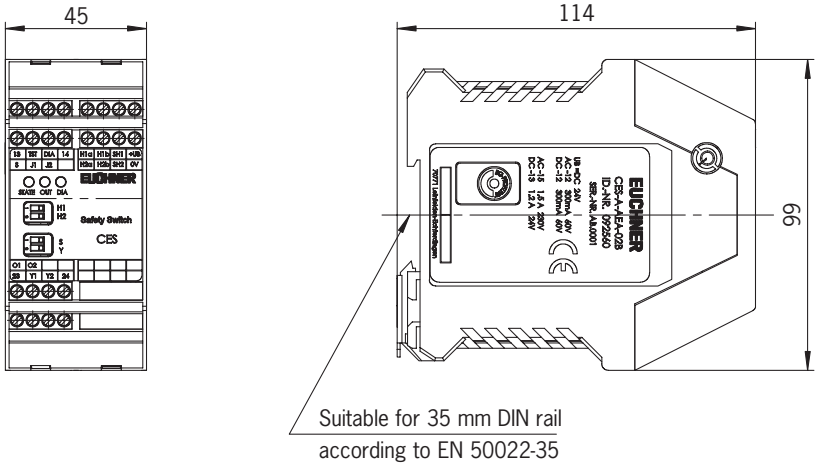

Switching characteristics

2 safety outputs (relay outputs)
2 door monitoring outputs (semiconductor outputs, not safety outputs)

Safety guard	
closed (all actuators detected)	open (e.g. actuator 1 not in the operating distance)
Read head 1 Actuator 1	Read head 1
13—14 23—24 24 V—O1 24 V—O2	13—14 23—24 24 V—O1 24 V—O2

Notes on the electrical connection

- All the electrical connections must either be isolated from the mains supply by a safety transformer according to EN/IEC 61558 with limited output voltage in the event of a fault, or by other equivalent isolation measures.
- The connections H1a/H1b ... H2a/H2b are not short circuit-proof.
- If a common power supply is used, all the inductive and capacitive loads (e.g. contactors) connected to the power supply must be connected to appropriate interference suppression units.

Notes on installation

The evaluation unit must be mounted in a control cabinet with a minimum degree of protection of IP 54. A snap-in element on the back of the evaluation unit is used for fastening to the standard rail (35 mm DIN rail).

Safety precautions

- The evaluation unit has a redundant switching design with self-monitoring. This means that the safety system is still effective even if a component fails.
- The door monitoring outputs O1 ... O2 are not fail-safe (not safety outputs)
- To ensure safety, both safety outputs 13/14 and 23/24 must always be evaluated.

Technical data

Parameters	Value			Unit
	min.	typ.	max.	
Housing material	Plastic PA6.6			
Dimensions	114 x 99 x 45			mm
Weight	0.25			kg
Ambient temperature at U_B = DC 24 V	-20	-	+55	°C
Atmospheric humidity	Max. 80 %, not condensing			
Degree of protection to IEC/EN 60529	IP20			
Degree of contamination / material group	2 / II			
Mounting	35 mm DIN rail according to EN 50022-35			
Number of read heads	Max. 2 read heads per evaluation unit			
Connection (screw terminals)	0.14	-	2.5	mm²
Operating voltage U_B (regulated, residual ripple < 5 %)	21	24	27	V DC
For the approval according to cULus the following applies	Operation with UL-class 2 power supply only			
Current consumption I_B (with relay energized) 6)	-	220	270	mA
External fuse (operating voltage)	0.4	-	8	A
Safety outputs	2 safety relays with positively driven contacts			
Switching current (relay outputs) - At switching voltage 1 ... 60 V AC/DC - At switching voltage 17 ... 30 V AC/DC - At switching voltage 17 ... 230 V AC	 1 1) 15 15	 - - -	 300 6000 1500	mA
Switching load according to cULus	Max. AC 30 V, class 2 / max. DC 60 V, class 2			
External fuse (safety circuit) according to IEC/EN 60269-1	6 AgG			
Utilization category according to IEC/EN 60947-5-1	AC-12 60V 300mA 50Hz / DC-12 60V 300mA AC-12 30V 6A / DC-12 30V 6A AC-15 230V 1.5A 50Hz / DC-13 24V 1.2A			
Classification according to IEC/EN 60947-5-3	PDF-M			
Suitable for safety category according to EN 954-1	4			
Rated insulation voltage U_i	250			V
Rated impulse withstand voltage U_{imp}	4			kV
Resilience to vibration	According to IEC/EN 60947-5-2			
Mechanical life (relays)	10 x 10^6			
Switching delay from state change 2) - 2 activated actuators - 1 activated actuator	 - -	 - -	 290 210	ms
Fault detection time 3)	-	-	500	ms
Switching frequency 5)	-	-	1	Hz
Difference time between the switching points of the two relays (for 2 activated actuators)	-	-	240	ms
Manual start operating mode - Duration of operation of start button - Start button response delay	 250 -	 - 200	 - 300	ms
Current via feedback loop Y1/Y2	5	8	10	mA
Permissible resistance via feedback loop	-	-	600	Ω
Ready delay 4)	-	10	12	s
Monitoring outputs (diagnostics DIA, enable O1...O2, semiconductor output, p-switching, short circuit-proof) - Output voltage - Max load	 0.8 x U_B -	 - -	 U_B 20	V DC mA
Start button input S, test input TST - Input voltage LOW HIGH - Input current HIGH	 0 15 5	 - - 8	 2 U_B 10	V DC V DC mA
EMC protection requirements	as per IEC/EN 60947-5-3			

1) If a switching current > 300 mA in conjunction with a switching voltage > 15 V or an inductive or capacitive load is switched once using the relay outputs, it is no longer possible to reliably switch small currents (< 15 mA) due to the contact erosion on the gold contacts.
2) Corresponds to the risk time according to EN 60947-5-3. This is the maximum switch-off delay for the safety outputs following removal of the actuator.
3) The fault detection time is the time for the detection of an internal fault in the device. At least one of the relay outputs is opened safely. The welding of one of the relay contacts is only detected after the safety guard is opened.
4) After the operating voltage is switched on, the relay outputs are switched off and the monitoring outputs are set LOW during the ready delay. For the visual indication of the delay, the green STATE LED flashes at a frequency of approx. 15 Hz.
5) In case of monitoring with feedback loop, the actuators must remain outside the operating distance, e.g. with a door open, until the feedback circuit is closed.
6) Without taking into account the load currents on the monitoring outputs.

Ordering table

Series	Safety category	Number of read heads	Item	Order No.
CES-A-AEA...	4	2	CES-A-AEA-02B	092 560

Evaluation unit CES-A-AEA-04B

- **Housing for DIN rail mounting, IP 20**
- **Relay output**
- **4 read heads can be connected**
- **In combination with read head CES-A-L... and actuator CES-A-B..**

Dimension drawing

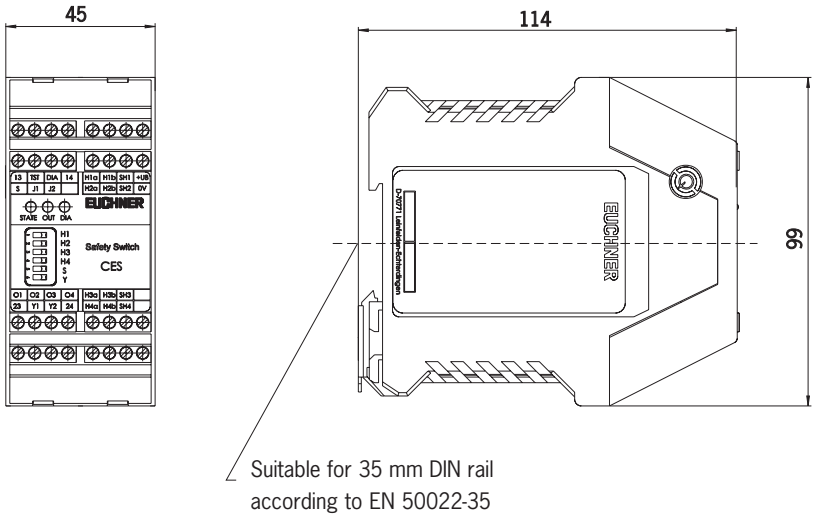

Switching characteristics

2 safety outputs (relay outputs)
4 door monitoring outputs (semiconductor outputs, not safety outputs)

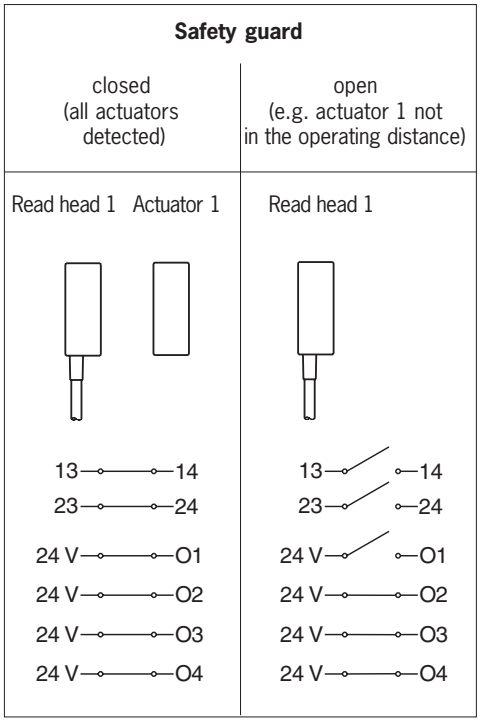

Notes on the electrical connection

- All the electrical connections must either be isolated from the mains supply by a safety transformer according to EN/IEC 61558 with limited output voltage in the event of a fault, or by other equivalent isolation measures.
- The connections H1a/H1b ... H4a/H4b are not short circuit-proof.
- If a common power supply is used, all the inductive and capacitive loads (e.g. contactors) connected to the power supply must be connected to appropriate interference suppression units.

Notes on installation

The evaluation unit must be mounted in a control cabinet with a minimum degree of protection of IP 54. A snap-in element on the back of the evaluation unit is used for fastening to the standard rail (35 mm DIN rail).

Safety precautions

- The evaluation unit has a redundant switching design with self-monitoring. This means that the safety system is still effective even if a component fails.
- The door monitoring outputs O1 ... O4 are not fail-safe (not safety outputs)
- To ensure safety, both safety outputs 13/14 and 23/24 must always be evaluated.

Technical data

Parameters	Value			Unit
	min.	typ.	max.	
Housing material	Plastic PA6.6			
Dimensions	114 x 99 x 45			mm
Weight	0.25			kg
Ambient temperature at U_B = DC 24 V	-20	-	+55	°C
Atmospheric humidity	Max. 80 %, not condensing			
Degree of protection to IEC/EN 60529	IP20			
Degree of contamination / material group	2 / II			
Mounting	35 mm DIN rail according to EN 50022-35			
Number of read heads	Max. 4 read heads per evaluation unit			
Connection (screw terminals)	0.14	-	2.5	mm^2
Operating voltage U_B (regulated, residual ripple < 5 %)	21	24	27	V DC
For the approval according to cULus the following applies	Operation with UL-class 2 power supply only			
Current consumption I_B (with relay energized) 6)	-	220	270	mA
External fuse (operating voltage)	0.4	-	8	A
Safety outputs	2 safety relays with positively driven contacts			
Switching current (relay outputs)				
- At switching voltage 1 ... 60 V AC/DC	1 1)	-	300	mA
- At switching voltage 17 ... 30 V AC/DC	15	-	6000	
- At switching voltage 17 ... 230 V AC	15	-	1500	
Switching load according to cULus	Max. AC 30 V, class 2 / max. DC 60 V, class 2			
External fuse (safety circuit) according to IEC/EN 60269-1	6 AgG			
Utilization category according to IEC/EN 60947-5-1	AC-12 60V 300mA 50Hz / DC-12 60V 300mA AC-12 30V 6A / DC-12 30V 6A AC-15 230V 1.5A 50Hz / DC-13 24V 1.2A			
Classification according to IEC/EN 60947-5-3	PDF-M			
Suitable for safety category according to EN 954-1	4			
Rated insulation voltage U_i	250			V
Rated impulse withstand voltage U_{imp}	4			kV
Resilience to vibration	According to IEC/EN 60947-5-2			
Mechanical life (relays)	10×10^6			
Switching delay from state change 2)				
- 4 activated actuators	-	-	450	ms
- 3 activated actuators	-	-	370	
- 2 activated actuators	-	-	290	
- 1 activated actuator	-	-	210	
Fault detection time 3)	-	-	500	ms
Switching frequency 5)	-	-	1	Hz
Difference time between the switching points of the two relays (for 4 activated actuators)	-	-	400	ms
Manual start operating mode				
- Duration of operation of start button	250	-	-	ms
- Start button response delay	-	200	300	
Current via feedback loop Y1/Y2	5	8	10	mA
Permissible resistance via feedback loop	-	-	600	Ω
Ready delay 4)	-	10	12	s
Monitoring outputs (diagnostics DIA, enable O1...O4, semiconductor output, p-switching, short circuit-proof)				
- Output voltage	0.8 x U_B	-	U_B	V DC
- Max load	-	-	20	mA
Start button input S, test input TST				
- Input voltage LOW	0	-	2	V DC
HIGH	15	-	U_B	V DC
- Input current HIGH	5	8	10	mA
EMC protection requirements	as per IEC/EN 60947-5-3			

1) If a switching current > 300 mA in conjunction with a switching voltage > 15 V or an inductive or capacitive load is switched once using the relay outputs, it is no longer possible to reliably switch small currents (< 15 mA) due to the contact erosion on the gold contacts.
2) Corresponds to the risk time according to EN 60947-5-3. This is the maximum switch-off delay for the safety outputs following removal of the actuator.
3) The fault detection time is the time for the detection of an internal fault in the device. At least one of the relay outputs is opened safely. The welding of one of the relay contacts is only detected after the safety guard is opened.
4) After the operating voltage is switched on, the relay outputs are switched off and the monitoring outputs are set LOW during the ready delay. For the visual indication of the delay, the green STATE LED flashes at a frequency of approx. 15 Hz.
5) In case of monitoring with feedback loop, the actuators must remain outside the operating distance, e.g. with a door open, until the feedback circuit is closed.
6) Without taking into account the load currents on the monitoring outputs.

Ordering table

Series	Safety category	Number of read heads	Item	Order No.
CES-A-AEA...	4	4	CES-A-AEA-04B	072 000

Wiring and block diagram CES-A-AEA-02B

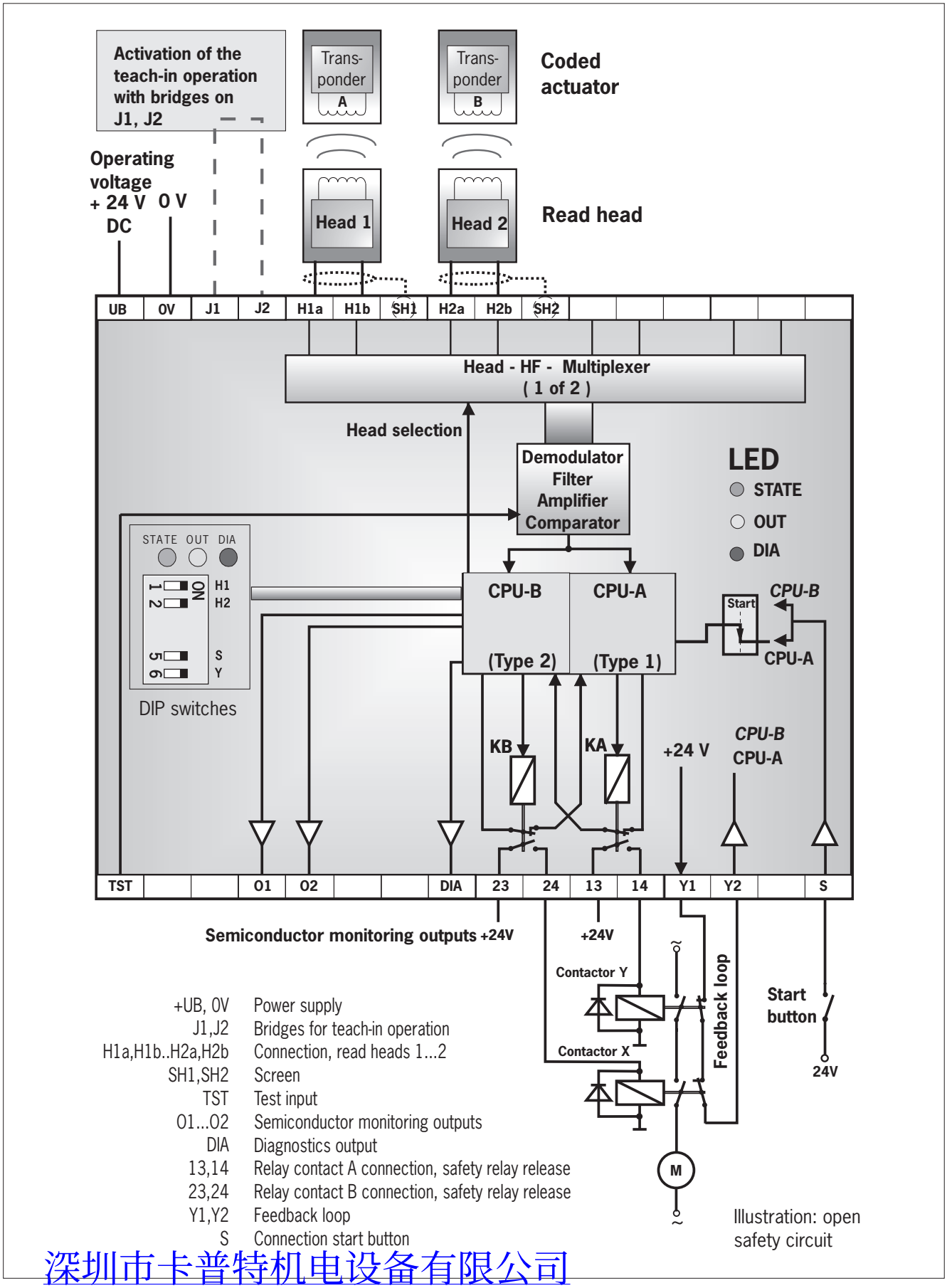

Illustration: open safety circuit

Wiring and block diagram CES-A-AEA-04B

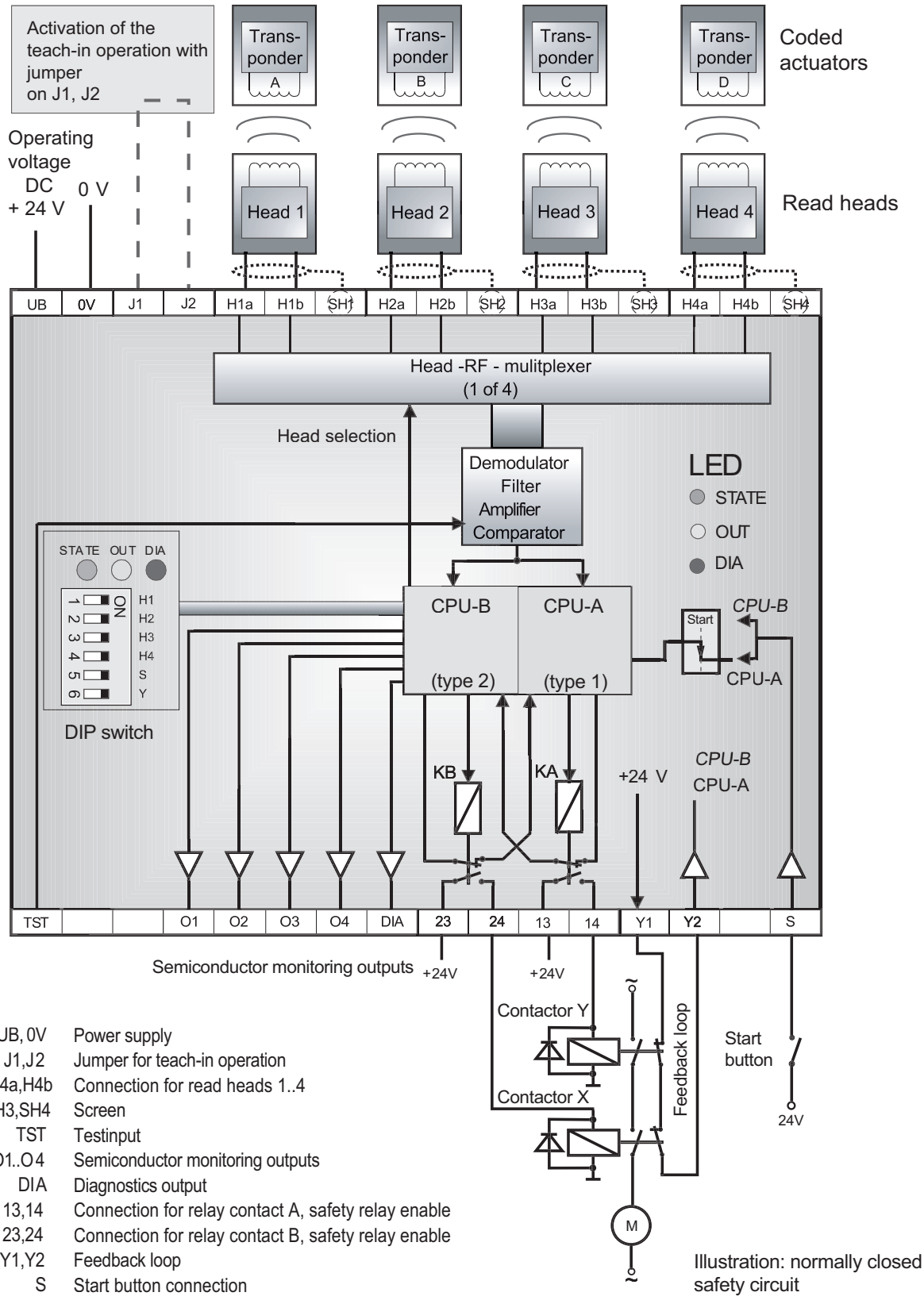

System functions evaluation unit CES-A-AEA...

Setup procedure

During setup, the parameters are set in the evaluation unit by the user using a teach-in operation (number of connected read heads, assignment of the actuators to the read heads, with or without automatic start, with or without feedback loop). During this process the read heads are activated.
These configuration parameters are saved in the non-volatile memory in the evaluation unit.

To trigger a teach-in operation, the user must perform the following actions in the stipulated order:

① Prepare for teach-in operation
- Switch off power supply U_B
- Fit a jumper between terminals J1 and J2

② Set required configuration on DIP switches

Switch marking	Slider position left (OFF)	Slider position right (ON)
1	No read head connected to terminals H1a, H1b, SH1	Read head connected to terminals H1a, H1b, SH1
2	No read head connected to terminals H2a, H2b, SH2	Read head connected to terminals H2a, H2b, SH2
3	No read head connected to terminals H3a, H3b, SH3	Read head connected to terminals H3a, H3b, SH3
4	No read head connected to terminals H4a, H4b, SH4	Read head connected to terminals H4a, H4b, SH4
5	Automatic start (No start button connected)	Manual start (Start button connected)
6	No feedback loop connected	Feedback loop connected

③ Set required configuration on machine
- Close all doors to be monitored (the actuators must be in the operating distance of the related read head)
- For **Manual start** operating mode: connect terminal S to 24 V (or keep start button pressed)
- For **With feedback loop** operating mode: keep feedback loop closed

④ Start teach-in operation
- Switch on operating voltage
- Wait for self-test (STATE LED flashes for approx. 10 seconds at 15 Hz)
- Teach-in operation starts (STATE LED flashes at approx. 1 Hz)
- Wait for acknowledgement of the teach-in operation (STATE LED goes out after approx. 10 seconds)

⑤ End teach-in operation
- Switch off operating voltage for at least 10 seconds
- Remove jumper between J1 and J2
- For **Manual start** operating mode: connect start button to terminal S
- For **With feedback loop** operating mode: connect feedback loop
- Switch on operating voltage
- Wait for self-test (STATE LED flashes for approx. 10 seconds at 15 Hz)

⑥ ⚠ **Check all safety guards for effectiveness** ⚠

Note
During the teach-in operation the following conditions must be met:

- There must be no state change, e.g. opening a safety door or closing a further safety door
- The power supply must not be switched off

If these conditions are not met, the evaluation unit switches to the safe fault state (diagnostics LED illuminates) and signals this operating fault with the STATE LED by 3 short flashes that are repeated every second. The teach-in operation must be repeated.

Warning
- The number of teach-in operations is unlimited. The evaluation unit can be re-configured as often as required.
- Actuators cannot be interchanged without a renewed teach-in operation.
- An actuator that has not been subjected to teach-in will not be detected by the related read head.
- Even if only one new actuator needs to be taught, a complete new teach-in operation must be carried out as described in the section "Setup procedure".
- Do not change DIP switches during operation.

Function test CES-A-AEA... (self-test)

On electromechanical safety switches or magnetic switches, the function test can be performed by cyclically opening the safety guard. From safety category 2, according to IEC/EN 60204-1 : 1997 (sec. 9.4.2.4), a function test must be performed on the entire safety system on start-up or after defined intervals.
The testing of the internal function of the safety switch CES is not necessary because the device monitors itself in real time. Wear on an output contact (relay output) is detected by the device at the latest the next time the safety guard is opened. A short circuit in the output cable is not detected by the device.
In addition, the entire safety circuit can be tested without opening the safety guard. For this purpose the opening of the safety guard can be simulated by applying DC 24 V to the test input.
The safety outputs are switched off, enabling testing of the complete safety circuit. The diagnostic output DIA of the evaluation unit is also set HIGH as a monitoring function.
When the test input is reset, the evaluation unit resets the diagnostic output DIA to LOW, the red LED switches off and normal operation continues. This permits self-testing of the safety system without opening the safety guard.

LED indicators

LED labels	LED color	Significance
STATE	Green	State display (multifunction display using flashing modes)
OUT	Yellow	Safety circuit closed
DIA	Red	Operating fault, external fault (fault in the feedback loop) or internal device fault TST input activated (function test active)

System status table CES-A-AEA-04B

STATE LED (green)	OUT LED (yellow)	DIA LED (red)	State
Setup			
Flashes continuously at approx. 4 Hz	Off	Off	Initial setup after delivery without jumper connected to J1, J2
Flashes at approx. 1 Hz	Off	Off	Teach-in operation
Off	Off	Off	Acknowledgement of completion of teach-in operation
Normal operation			
Flashes at approx. 15 Hz	Off	Off	Self-test, duration approx. 10 seconds, is performed after the application of the operating voltage U_B
On	Off	Off	Normal operation, not all monitored doors are closed
On	On	Off	Normal operation, all monitored doors are closed (**After** pressing the start button, for Manual start operating mode)
Function test			
On	Off	On	Function test active (TST input = 24 V)
Fault display			
Off	Off	On	Component failure inside the device or actuator in the operating distance for **less than 0.5 s** or actuator CES-A-BMB in the inadmissible range
Operating fault			
3 flashes repeated after 1 s	Off	On	Configuration fault: **Teach-in operation must be performed again** Possible causes: - State change during the teach-in operation - None of the DIP switches in ON position - DIP switch setting and connected configuration did not match during teach-in operation - DIP switch setting has been changed without teach-in operation - The teach-in jumper (J1, J2) was fitted with power supply switched on - Connected feedback loop (Y1,Y2) present, although a feedback loop was not present during teach-in - 24 V signal present at the start button input (S) although teach-in was performed with "Automatic start" operating mode
4 flashes repeated after 1 s	Off	On	Fault in feedback loop

Non-contact safety switches CES-A-C5...

- **Standard housing according to IEC/EN 60947-5-2, IP 67**
- **Read head and evaluation unit integrated in the standard housing**
- **Semiconductor output**
- **Connection of the safety circuit using M12 plug connector**

Functional description

The **C**oded **E**lectronic **S**afety switch **CES** comprises two components:

- Coded actuator
- Evaluation unit / read head

The evaluation unit described in this chapter is integrated with the read head in a standard housing according to IEC/EN 60947-5-2.

Thanks to the high degree of protection IP67, this switch can be used directly on the safety guard in a very harsh environment. Semiconductor technology allows for a compact design of the evaluation unit and wear-free switching with a theoretically unlimited number of operating cycles.
The information from the coded actuator is read by the evaluation unit and processed at the same point. The transfer of static signals (information on whether door open or closed) to the higher level switchgear permits the use of connecting cables up to 300 m long with the system.
Serial wiring, i.e. the cascading of several evaluation units, is possible. In this way, you can implement decentralized wiring concepts with the safety switch CES.
Specifically, the major advantage of the system is that the positioning of the evaluation unit directly at the safety guard saves space in the control cabinet.
The system operator can read the current state of the safety switch on the two LED indicators (one with double function). If the actuator is in the operating distance, the OUT LED illuminates yellow. Even a possible fault in the evaluation unit is displayed by a red LED. In service, the safety switch connected with an M12 plug connector can be replaced in seconds. The required approach direction can also be set quickly on the compact housing. After two fastening screws have been undone, the active face of the read head can be set in 5 different positions.

The non-contact safety switch CES-A-C5E... has a relatively large operating distance of 20 mm. Compared with mechanical safety switches, the assembly of the unit is much easier and the need for precision in the door rails is also reduced considerably. Therefore the assembly and maintenance costs are much lower.

The safety switch with integrated evaluation unit and read head is fastened to the fixed part of the safety guard.
The actuator attached to the movable part of the safety guard is moved towards the read head fitted in the safety switch by closing the doors. When the switch-on distance is reached, power is supplied to the actuator by the inductive read head and data can be transferred.
The bit pattern read is compared with the code saved in the evaluation unit; if the data matches, the safety outputs (semiconductor outputs) and the door monitoring output (semiconductor output) are also set HIGH.
Due to the combination of dynamic polling of the actuator and the redundant, diverse design of the safety electronics with the two feedback safety outputs, the evaluation unit will enter the safe state with every detectable fault.
When the safety guard is opened, the safety outputs switch off the safety circuit and the door monitoring output (OUT) is switched LOW. The state of the safety outputs is monitored internally by two microprocessors.
On an internal fault in the evaluation unit, the safety circuit is switched off and the OUT/ERROR LED illuminates red.
The evaluation unit has a redundant switching design with self-monitoring. This means that the safety system is still effective even if a component fails.

Your advantages

- Evaluation unit teach-in function
  - New actuator teach-in can be performed without any other equipment
  - The number of teach-in operations is restricted to eight to provide security against tampering
- Safety switch in standard housing according to IEC/EN 60947-5-2
- Two redundant design semiconductor outputs (safety outputs) with internal monitoring:
  - CES-A-C5E-01: Safety category 3 according to EN 954-1 (according to BG and SIBE Switzerland)
  - CES-A-C5H-01: Safety category 4 according to EN 954-1 (according to BG and SIBE Switzerland)
- Read head and evaluation unit form a compact unit
  - Reduction of wiring faults during setup
- Relocation of the evaluation unit from the control cabinet to the system
  - Space-saving in the control cabinet
  - Decentralized wiring concept possible
- Connection via M12 plug connector
  - Prevention of wiring faults
- Easy adjustment of the read head in 5 approach directions
- Short circuit-proof monitoring and safety outputs
  - High reliability
- Large operating distance of 20 mm with additional hysteresis
  - Large mechanical tolerances possible for door guide
- Small design of the actuator (cube-shaped)
- Flush installation in door panel is possible
- Approval from BG

Safety switch CES-A-C5...

- **Read head and evaluation unit integrated in the standard housing**
- **Semiconductor output**
- **Connection via M12 plug connector**
  (Connection cabel see page 65)
- **In combination with actuator CES-A-BBA**

Dimension drawing

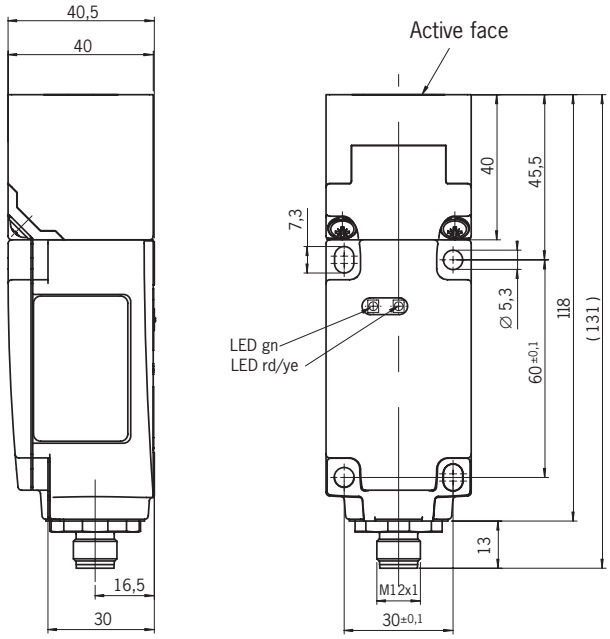

Notes on the electrical connection

- The operating voltage U_B is reverse polarity protected.
  The contacts LA/LB, -LA/-LB and OUT are short circuit-proof, however they are not reverse polarity protected
- All the electrical connections must either be isolated from the mains supply by a safety transformer according to EN/IEC 61558 with limited output voltage in the event of a fault, or by other equivalent isolation measures.
- If a common power supply is used, all the inductive and capacitive loads (e.g. contactors) connected to the power supply must be connected to appropriate interference suppression units.

Typical operating distance (only in conjunction with actuator CES-A-BBA)

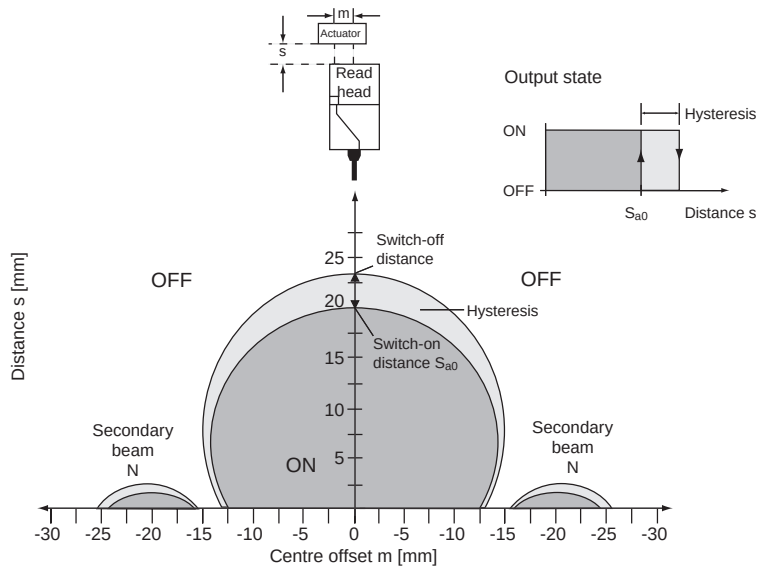

For a side approach direction for the actuator and safety switch, a minimum distance of s = 3 mm must be maintained so that the operating distance of the side lobes is not entered.

Switching characteristics

2 safety outputs (semiconductor outputs)
1 door monitoring output (semiconductor output, not a safety output)

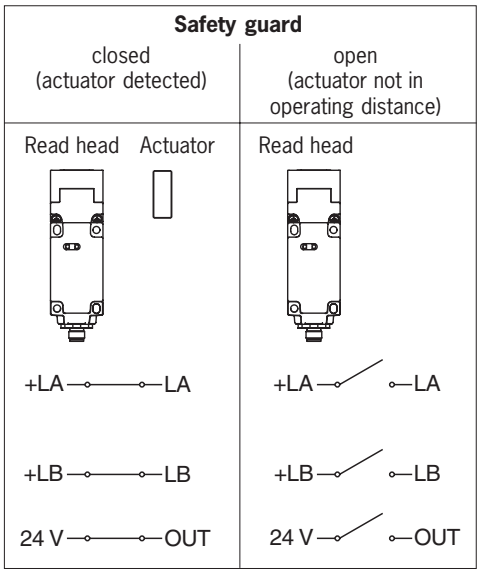

Safety precautions

To ensure safety, both safety outputs (LA and LB) must always be evaluated.

Changing the approach direction

The active face of the read head can be adjusted in 5 directions. The face is marked with the EUCHNER logo. The center of the circle corresponds to the middle of the read head.

Technical data

Parameters	Value			Unit
	min.	typ.	max.	
Housing material	Plastic PBT V0 GF30			
Dimensions	According to EN 60 947-5-2			
Weight	0.4			kg
Ambient temperature at U_B = DC 24 V	-20	-	+55	°C
Degree of protection to IEC/EN 60529	IP67			
Safety class according to IEC/EN 61558	III			
Installation position	Any			
Connection type	M12 plug connector, 8-pin, screen can be applied			
Operating voltage U_B (reverse polarity protected, regulated, residual ripple < 5 %)	18	24	27	V DC
For the approval according to cULus the following applies	Operation with UL-class 2 power supply only			
Current consumption	80			mA
Switching load according to cULus	DC 24 V, class 2			
External fuse (operating voltage)	0.25	-	8	A
Power supply for load U(+LA) / U(+LB)	18	-	27	V DC
Safety outputs (LA / LB, 2 semiconductor outputs, p-switching, short circuit-proof, electrically decoupled) - Output voltage U(LA) / U(LB) [1] HIGH U(LA) HIGH U(LB) LOW U(LA) / U(LB)	 U(+LA) - 1.5 U(+LB) - 1.5 0	 - - -	 U(+LA) U(+LB) 1	V DC
Switching current per safety output	1	-	400	mA
External fuse U(+LA) / U(+LB), Safety circuit	400 mA medium slow-blow			
Utilization category according to IEC/EN 60947-5-2	DC-13 24V 400 mA			
Classification according to IEC/EN 60947-5-3	PDF-M			
Door monitoring contact (OUT, semiconductor output, p-switching, short circuit-proof) - Output voltage - Max load	 0.8 x U_B -	 - -	 U_B 20	 V DC mA
Rated insulation voltage U_i	-	-	30	V
Rated impulse withstand voltage U_{imp}	-	-	1.5	kV
Resilience to vibration	According to IEC/EN 60947-5-2			
Switching delay from state change [2]	-	-	180	ms
Fault detection time [3]	-	-	500	ms
Difference time between the two safety outputs	-	-	120	ms
Ready delay [4]			3	s
Dwell time [5]	0.5	-	-	s
Switching frequency	-	-	1	Hz
Operating distance for center offset = 0 [6] Switch-on distance s_{a0} Switching hysteresis Safe switch-off distance s_{ar}	 18 2 -	 20 3 -	 - - 40	mm
Mounting distance between two read heads or two actuators	80	-	-	mm
EMC protection requirements	As per IEC/EN 60947-5-3			
LED indicators	STATE OUT/ERROR OUT/ERROR	green LED: flashing: yellow LED: red LED:	Normal operation Teach-in operation Actuator detected - Test input activated - Internal electronics fault - Invalid teach-in operation	

1) Values at a switching current of 50 mA without taking into account the cable lengths.
2) Corresponds to the risk time according to EN 60947-5-3. This is the maximum switch-off delay for the safety outputs following removal of the actuator.
3) The fault detection time is the time for the detection of an internal fault in the device. At least one of the semiconductor outputs is switched off safely.
4) After the operating voltage is switched on, the semiconductor outputs are switched off and the monitoring outputs are set LOW during the ready delay.
5) The dwell time of an actuator inside and outside the operating distance must be at least 0.5 s to ensure reliable detection of internal faults in the evaluation unit (self-monitoring).
6) The values apply for surface installation of the actuator.

Ordering table

Series	Switch-on distance s_{a0} [mm]	Safety category	Item	Order No.
CES-A-C5...	20	3	CES-A-C5E-01	077 750
		4	CES-A-C5H-01	091 458

Wiring and block diagram CES-A-C5...

Coded actuator

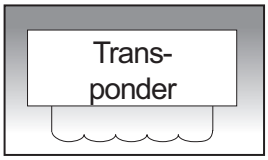

Illustration: Actuator not in the operating distance

Read head with evaluation unit CES-A-C5...

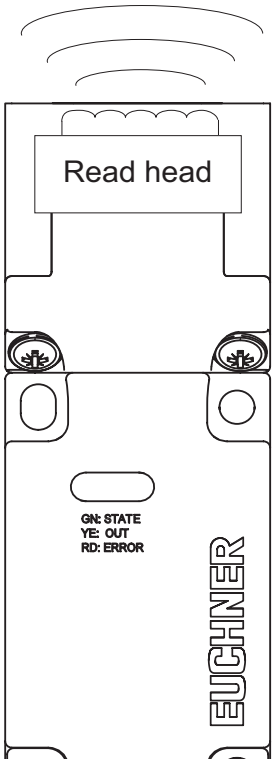

Housing:
NG 5
118 x 40 x 40 mm

Output circuit:

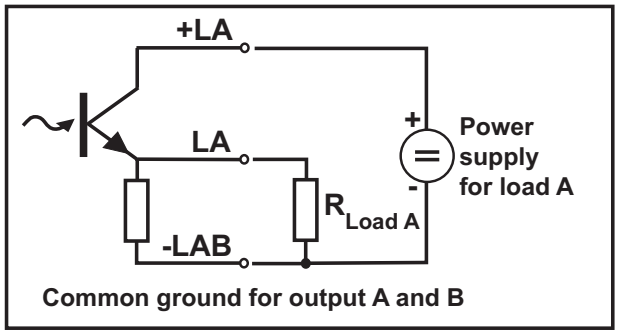

Pin assignment:

Pin	Core color	Function
1	WH/white	0V
2	BN/brown	+ U_B
3	GN/green	LA
4	YE/yellow	LB
5	GY/gray	OUT
6	PK/pink	+LA
7	BU/blue	-LAB
8	RD/red	+LB

Connection:
M 12x1
8-pin, screened

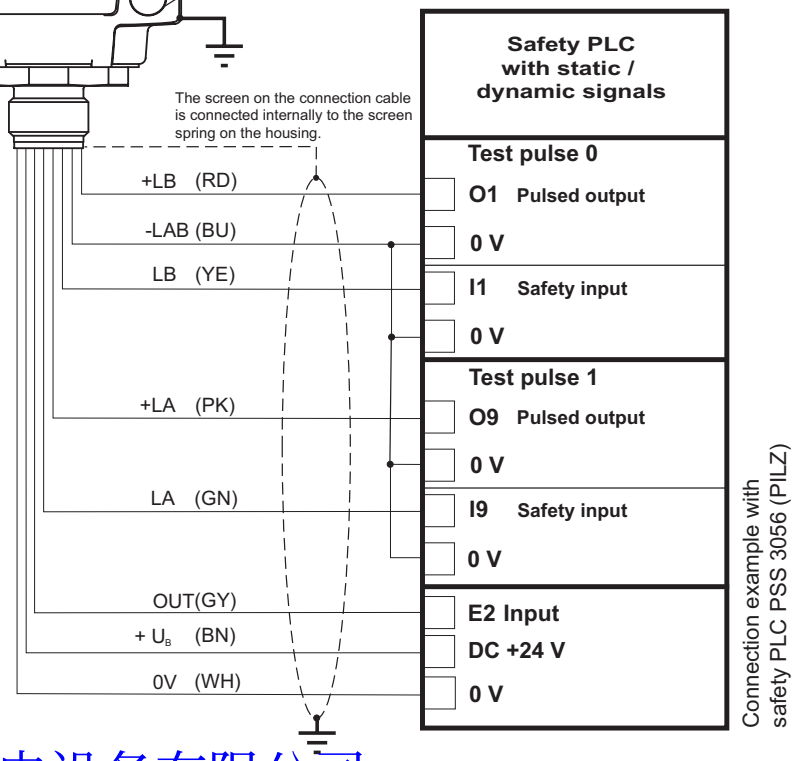

View on the safety switch's plug

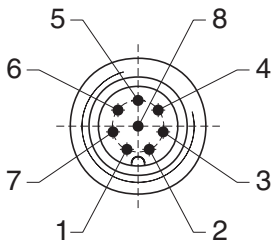

System functions safety switches CES-A-C5... and CES-A-S5...

Teach-in function for actuator

The actuator must be allocated to the evaluation unit using a teach-in function before the system forms a functional unit.
During a teach-in operation, the safety outputs and the door monitoring output OUT are LOW, i.e. the system is in the safe state.

Teach-in function for first actuator
(default setting on delivery)

① Apply the operating voltage to the evaluation unit
- green LED flashes fast (approx. 4 Hz)

② Move actuator to the read head
(Observe distance < S_{a0})
- teach-in operation starts, green LED flashes slowly (approx. 1 Hz)

③ Teach-in operation completed (after 60 seconds)
- green LED goes out

④ To activate the actuator code from the teach-in operation in the evaluation unit, the operating voltage must then be switched off for min. 10 seconds.

Teach-in function for a new actuator

① Apply the operating voltage to the evaluation unit

② Move new actuator to the read head
(Observe distance < S_{a0})
- teach-in operation starts, green LED flashes (approx. 1 Hz)

③ Teach-in operation completed (after 60 seconds)
- green LED goes out, new code saved, old code deactivated

④ To activate the new actuator code from the teach-in operation in the evaluation unit, the operating voltage must then be switched off for min. 10 seconds.

Note
- Repeated teach-in of the same actuator on the same evaluation unit is not possible
- The number of teach-in operations on one evaluation unit is limited to a maximum of 8
- The evaluation unit can only be operated with the last actuator taught
- A teach-in operation is invalid if:
  - The teach-in operation is cancelled before the green LED goes out
  - The power supply is switched off during the teach-in operation
- When switching on the evaluation unit (application of operating voltage), the STATE LED signals the number of possible remaining teach-in operations (see system status table)

Warning
- After the eighth teach-in operation or if an "old" actuator is placed against the read head, the system automatically switches to the teach-in mode. In both cases, a teach-in operation with a duration of 60 seconds is started; however, the last actuator code remains active (see status table) - a new code is not taught.

Non-contact safety switches CES-A-S5...

- **Standard housing according to IEC/EN 60947-5-2, IP 67**
- **Read head and evaluation unit integrated in the standard housing**
- **Semiconductor output**
- **Connection of the safety circuit using M12 plug connector**

Functional description

The non-contact safety switch CES-A-S5H-01 combines two different functions in one device:

- Safety function
- Identification function/position sensor

The **safety function** is the same as the functionality of the EUCHNER safety switch CES-A-C5H-01 in the compact housing with semiconductor output employing proven transponder technology:

- Two safety semiconductor outputs LA and LB signal the presence of a safety actuator and the closed position of the safety guard.
- Every safety actuator is unique, the actuator can be used with all non-contact EUCHNER safety switches CES.

The **identification function** or **position sensor** in the device is largely identical to the EUCHNER identification system CIS3 and its proven read head CIT3PL:

- Using 14 different position actuators, 14 different positions of a moving guard can be detected.

Every position actuator has a number that is saved in the integrated transponder.
For ease of use during installation and maintenance of the system, laser marking is used to apply the related transponder number in plain text to the housing of the position actuators. In addition, for clear differentiation between the actuators, different housing colors are used for safety actuators (red) and position actuators (green).

The related transponder number 2, 3, 4…9, A, B …F for the position actuator (in total 14 different dogs) is signaled to the higher level control system using the 4 semiconductor outputs D0, D1, D2, D3 in binary code. These data outputs have no safety function.
The position actuators cannot switch the safety outputs LA and LB. The safety outputs on the switch are only activated by the current safety actuator.
The safety actuator is always signaled on the data outputs as number 1 (0001)
(The no. 1 on the 4 data outputs corresponds to the OUT output on the EUCHNER safety switches CES-A-C5…).
Using the binary code 0000 it is signaled that neither the safety actuators nor a position actuator is within the operating distance of the read head (see pulse diagram on page 35).

Using 4 yellow LEDs (D0, D1, D2, D3) on the safety switch, the data outputs currently set are indicated visually based on the actuators within the operating distance.

The non-contact switch CES-A-S5H-01 has a large operating distance of 20 mm for the safety actuators and the position actuators. Compared to mechanical safety switches, significantly less effort is required here for the adjustment of the door guide.

The maximum relative speed of the position actuator towards the read head is extremely high and is max. 2.0 m/sec. To enable the higher level control system to reliably detect the signals read, the position actuators are "stretched" electronically, i.e. the signals remain set on the data outputs D0, D1, D2, D3 for an additional delay of approx. 0.2 seconds.

With conventional transponder systems, undefined states occur if the transponder is at the edge of the operating distance. These states manifest themselves in the form of irregular state changes and the flickering of the optical indicators.

The EUCHNER safety switches CES are equipped with a special internal circuit. This circuit provides exact operating points for the approach and removal (with shutdown hysteresis) of the actuators (transponder) with the following advantages:

- Reliable operation is ensured at all permissible movement speeds
- Sporadic failure to detect the transponder or the reading of incorrect data is effectively prevented.

If the actuator is positioned exactly at the limit of the switch-on distance, vibrations at the safety guard will not cause the machine to stop unintentionally.

A possible application example for the safety switch CES-A-S5H-01 is the monitoring of automatic roller doors.
Instead of fastening, adjusting and wiring several mechanical position switches as well as two electromechanical safety switches, it is only necessary to fasten the safety switch CES-A-S5H-01 (safety category 4) to the stationary part of the safety guard and connect it using a 12-pin plug connector.
The position actuators (dogs) are mounted at the necessary positions of the moving part of the safety guard. The safety actuator is fitted with the safety guard in the closed position. As a result the roller door can be closed at high speed (max. 2.0 m/s). On the detection of the last position actuator, the number of the actuator is forwarded over the data outputs to the control system and the roller door speed reduced. When the safety guard (roller door) is in the closed position, the safety actuator is detected, the safety outputs on the CES-A-S5H-01 switched and the system can be started.

The fastening and wiring effort for the mechanical position switches is reduced to zero.
In addition, all further advantages of non-contact transponder technology such as freedom from wear, large operating distance with highly tolerant door guiding.

Your advantages

- Safety and identification functions integrated into one switch
- Detection of 14 different position actuators
- High approach speed (2.0 m/s) of the position actuators
- Safety switch in standard housing according to EN 60947-5-2
  - Read head and evaluation unit form a compact unit
- Relocation of the evaluation unit from the control cabinet to the system
  - Space-saving in the control cabinet
  - Decentralized wiring concept possible
- Two redundant design semiconductor outputs (safety outputs) with internal monitoring
- Connection using 12-pin plug connector
  - Reduction of wiring faults during setup
- Safety category 4 according to EN 954-1
- BG approval (approval pending)

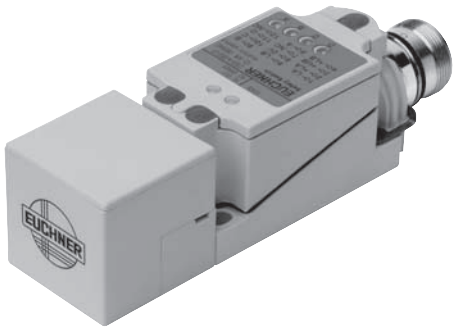

Safety Switch CES-A-S5H-01

- **Safety and identification functions**
- **Read head and evaluation unit integrated in the standard housing**
- **Semiconductor output**
- **Connection using 12-pin plug connector** (Plug connector see page 66)
- **In combination with safety actuator CES-A-BBA and position actuator CES-A-NBA-.**

Dimension drawing

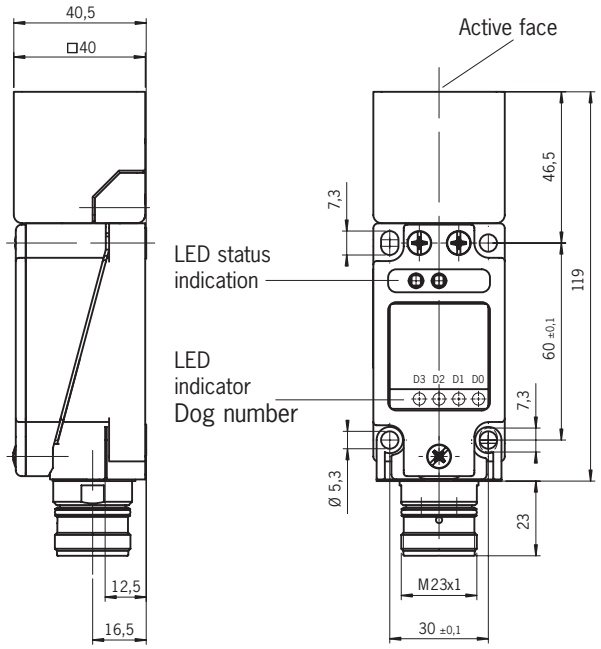

Safety precautions

To ensure safety, both safety outputs (LA and LB) must always be evaluated.

Typical operating distance (for safety actuator and position actuator)

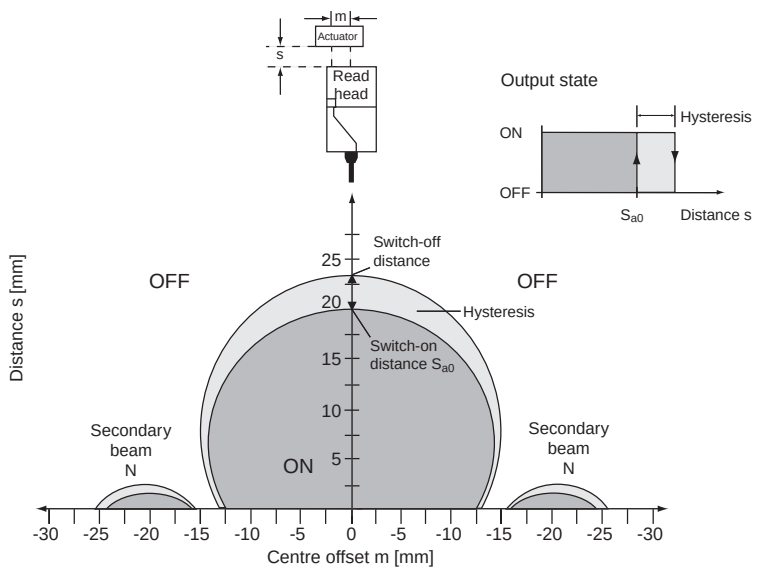

For a side approach direction for the actuator and safety switch, a minimum distance of s = 3 mm must be maintained so that the operating distance of the side lobes is not entered.

Switching characteristics

2 safety outputs (semiconductor outputs)
4 data outputs for actuator number (semiconductor outputs, not safety output)

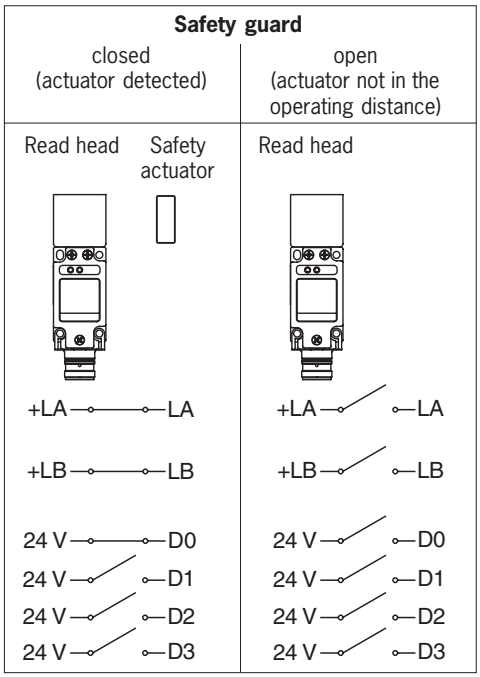

Notes on the electrical connection

- The operating voltage U_B is reverse polarity protected.
- The data outputs D0, D1, D2, D3 have no safety function.
- Both safety outputs LA and LB must be evaluated.
- The safety outputs LA and LB as well as the data outputs D0, D1, D2, D3 are short circuit-proof.
- All the electrical connections must either be isolated from the mains supply by a safety transformer according to IEC/EN 61558 with limited output voltage in the event of a fault, or by other equivalent isolation measures.
- If a common power supply is used, all the inductive and capacitive loads (e.g. contactors) connected to the power supply must be connected to appropriate interference suppression units.

Changing the approach direction

The active face of the read head can be adjusted in 5 directions. The face is marked with the EUCHNER logo. The center of the circle corresponds to the middle of the read head.

Technical data

Parameters	Value			Unit
	min.	typ.	max.	
Housing material	Plastic PBT V0 GF20			
Dimensions	According to EN 60 947-5-2			
Weight	0,4			kg
Ambient temperature at U_B = DC 24 V	-20	-	+55	°C
Degree of protection according to IEC/EN 60529	IP67			
Safety class according to IEC/EN 61558	III			
Installation position	Any			
Connection type	M23 plug connector, 12-pin			
Operating voltage U_B (reverse polarity protected, regulated, residual ripple < 5 %)	18	24	27	V DC
Current consumption	50			mA
External fuse (operating voltage)	0,25	-	8	A
Power supply for load U(+LA) / U(+LB)	18	-	27	V DC
Mounting distance between two read heads or actuators	80	-	-	mm
Classification according to IEC/EN 60947-5-3	PDF-M			
EMC protection requirements	As per IEC/EN 60947-5-3			
Safety outputs (LA / LB, 2 semiconductor outputs, p-switching, short circuit-proof, electrically decoupled) - Output voltage U(LA) / U(LB) 1) HIGH U(LA) HIGH U(LB) LOW U(LA) / U(LB)	 U(+LA) - 1,5 U(+LB) - 1,5 0	 - - -	 U(+LA) U(+LB) 1	V DC
Switching current per safety output	1	-	400	mA
External fuse U(+LA) / U(+LB), safety circuit	400 mA medium slow-blow			
Utilization category according to IEC/EN 60947-5-2	DC-13 24V 400 mA			
Rated insulation voltage U_i	-	-	30	V
Rated impulse withstand voltage U_{imp}	-	-	1,5	kV
Resilience to vibration	According to IEC/EN 60947-5-2			
Switching delay from state change 2)	-	-	180	ms
Fault detection time 3)	-	-	500	ms
Difference time between the two safety outputs	-	-	120	ms
Ready delay 4)			3	s
Dwell time 5)	0,5	-	-	s
Switching frequency	-	-	1	Hz
Operating distance for center offset = 0 6) Switch-on distance s_{a0} Switching hysteresis Safe switch-off distance s_{ar}	 15 2 -	 20 3 -	 - - 40	mm
Data outputs (D0, D1, D2, D3) Semiconductor push-pull outputs short circuit-proof) - Output voltage HIGH - Output voltage LOW	 0,8 x U_B 0	 - -	 U_B 2	V DC
Load current per output	-	-	20	mA
Switch-on time-delay from state change (with position actuators)	4	-	9	ms
Switch-off time-delay from state change (with position actuators)	-	200	-	ms
Relative speed with position actuators	-	-	2	m/s
With permissible read distance s	6	-	10	mm
Mounting distance between position actuators or position actuators and safety actuators	75	-	-	mm
Operating distance at read distance s = 6 ... 10 mm 6) - Side operating point on center offset - Switching hysteresis	 ± 10 0,3	 ± 14 0,7	 - -	mm

1) Values at a switching current of 50 mA without taking into account the cable lengths.
2) Corresponds to the risk time according to EN 60947-5-3. This is the maximum switch-off delay for the safety outputs following removal of the actuator.
3) The fault detection time is the time for the detection of an internal fault in the device. At least one of the semiconductor outputs is switched off safely.
4) After the operating voltage is switched on, the semiconductor outputs are switched off and the monitoring outputs are set LOW during the ready delay.
5) The dwell time of an actuator inside and outside the operating distance must be at least 0.5 s to ensure reliable detection of internal faults in the evaluation unit (self-monitoring).
6) The values apply for surface installation of the actuator.

Ordering table

Item	Safety category	Order No.
CES-A-S3H-01	4	090 640

Wiring and block diagram CES-A-S5...

Coded actuator

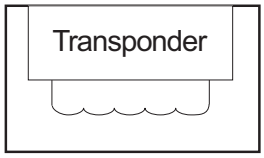

Read head with evaluation unit CES-A-S5H-01

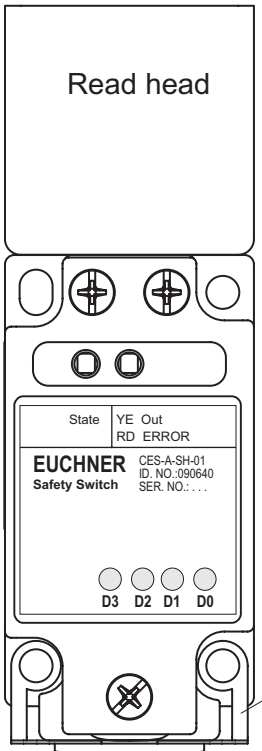

Output circuit for output A:

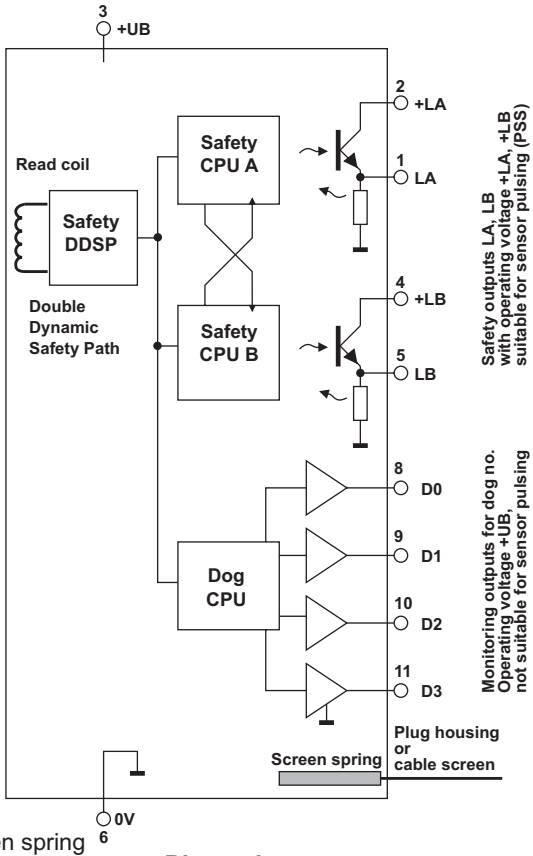

Connection:
M23 plug connector
12-pin, screened

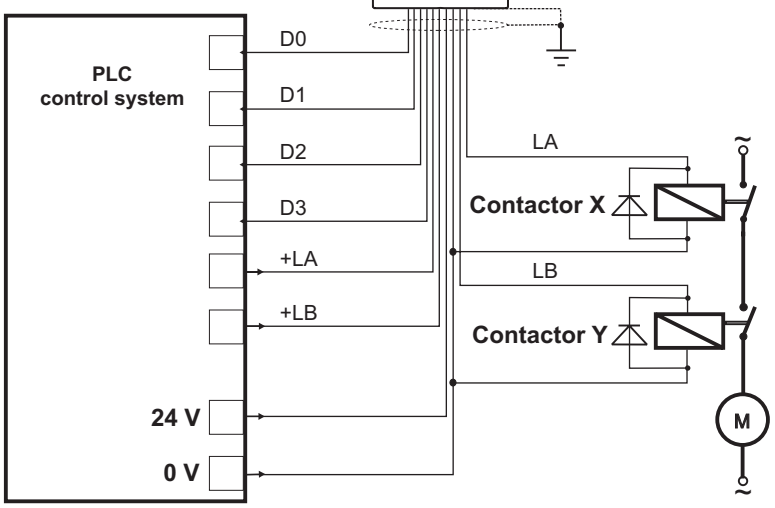

Pin assignment:

Pin	Function
1	LA
2	+LA
3	+UB
4	+LB
5	LB
6	0V
7	NC
8	D0
9	D1
10	D2
11	D3
12	NC

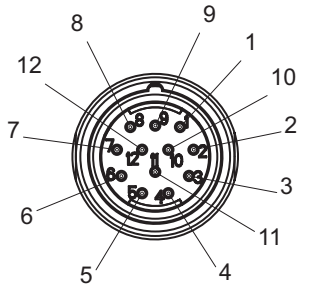

View on the safety switch's plug

LEDs

Safety switch LED displays

LED labels	LED color	Significance
STATE	Green	Normal operation
	Green flashing	Teach-in operation
OUT/ERROR	Yellow	Safety actuator detected
	Red	Internal electronics error or invalid teach-in operation

Position sensor LED displays

LED labels	LED color	Significance
D0, D1, D2, D3	Yellow	Indication of the actuator number (binary code)

Allocation table

Allocation of the actuator numbers to the safety outputs and data outputs

Actuator	Safety outputs		Data outputs			
	LA	LB	D3	D2	D1	D0
Safety actuator	1	1	0	0	0	1
Actuator 2	0	0	0	0	1	0
Actuator 3	0	0	0	0	1	1
Actuator 4	0	0	0	1	0	0
Actuator 5	0	0	0	1	0	1
Actuator 6	0	0	0	1	1	0
Actuator 7	0	0	0	1	1	1
Actuator 8	0	0	1	0	0	0
Actuator 9	0	0	1	0	0	1
Actuator A	0	0	1	0	1	0
Actuator B	0	0	1	0	1	1
Actuator C	0	0	1	1	0	0
Actuator D	0	0	1	1	0	1
Actuator E	0	0	1	1	1	0
Actuator F	0	0	1	1	1	1

Pulse diagram

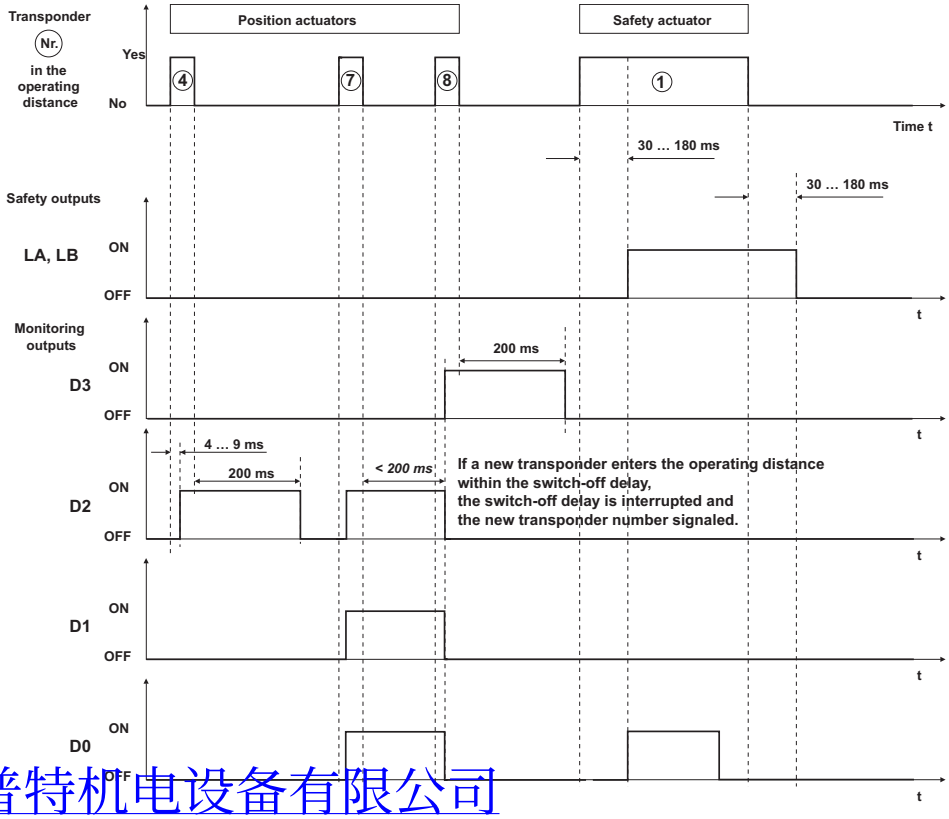

Read head CES-A-LNA...

- **Cube-shaped design 42 x 25 mm**
- **Hard-wired cable**
- **In combination with evaluation units CES-A-A... and actuators CES-A-BBA**

Dimension drawing type CES-A-LNA...

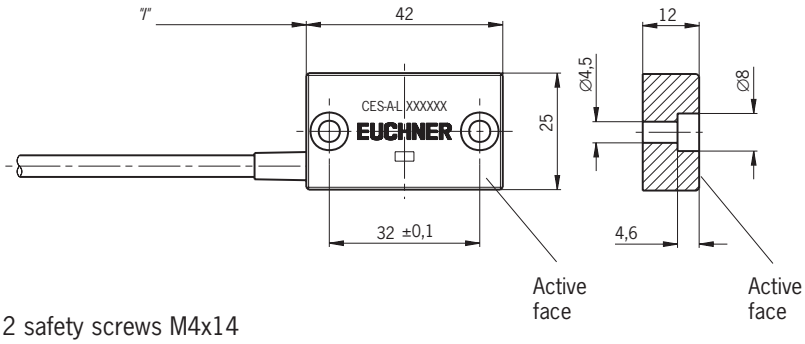

2 safety screws M4x14 included

Notes on installation

- The connection cable must only be extended using EUCHNER plug connectors and adequate consideration must be given to EMC during assembly.
  Intermediate terminals must not be used.
- Actuator and read head must be fitted so that:
  - The active faces (front faces) are at the switch-on distance 0.8 x S_{a0} or closer (see technical data) with the safety guard closed.
  - They are not used as a mechanical stop.
  - They are positively mounted on the safety guard, e.g. by using the safety screws included.

Safety precautions

- If the read head and/or actuator is/are installed flush, the switching distance changes as a function of the installation depth and the safety guard material.

Typical operating distance

With evaluation unit CES-A-ABA-01 and actuator CES-A-BBA

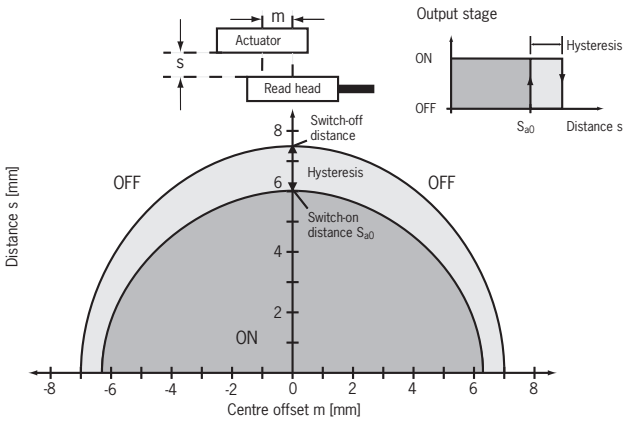

With evaluation unit CES-A-ABA-01B/CES-A-AEA... and actuator CES-A-BBA

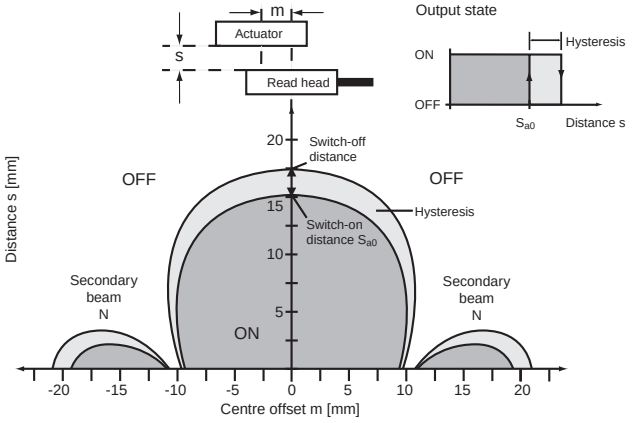

For a side approach direction for the actuator and read head, a minimum distance of s = 3 mm must be maintained so that the operating distance of the side lobes is not entered.

Technical data

Parameters	Value			Unit
	min.	typ.	max.	
Housing material	Fortron, reinforced thermoplastic, fully encapsulated			
Dimensions	42 x 25 x 12			mm
Weight (incl. 10 m cable)	0.3			kg
Ambient temperature	-25	-	+70	°C
Degree of protection	IP67			
Installation position	Any			
Method of operation	Inductive			
Dynamic data transfer to the evaluation unit	2			kbit/s
Power supply	Via evaluation unit			
Dwell time [1]	0.5	-	-	s
Operating distance for center offset m = 0 [2] (evaluation unit CES-A-ABA-01 with CES-A-BBA)				
- Safe switch-off distance S_{ar}	-	-	23	
Cable length l = 0 to 25 m				
- Switch-on distance S_{a0}	5	6	-	mm
- Switching hysteresis	0.5	1.5	-	
Cable length l ≥ 25 to 50 m				
- Switch-on distance S_{a0}	4	4.8	-	
- Switching hysteresis	0.4	1.2	-	
Operating distance for center offset m = 0 [3] (Evaluation unit CES-A-ABA-01B/CES-A-AEA... with CES-A-BBA)				
- Safe switch-off distance S_{ar}	-	-	32	
Cable length l = 0 to 25 m				
- Switch-on distance S_{a0}	10	15	-	mm
- Switching hysteresis	0.5	2	-	
Cable length l ≥ 25 to 50 m				
- Switch-on distance S_{a0}	8	12	-	
- Switching hysteresis	0.4	1.6	-	
Connection cable	Hard-wired encapsulated connection cable, with crimped ferrules PVC, ∅ 4.6 mm PUR, ∅ 4.8 mm, suitable for drag chain			
Cable length	See ordering table		50	m

1) The dwell time is the time that the actuator must be inside or outside the operating distance.
2) These values apply for flush installation of the read head and the actuator in aluminum.
3) These values apply for surface installation of the read head and the actuator.

Pin assignment

Read head with connection cable

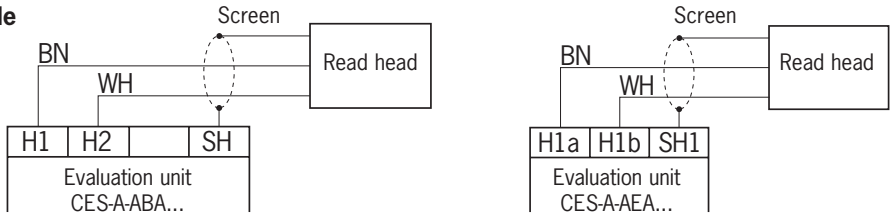

Ordering table

Series	Cable type Cable length „l“ (meters)	V = PVC P = PUR	Item	Order No.
CES-A-LNA...	-05	V	CES-A-LNA-05V	071 845
	-10	V	CES-A-LNA-10V	071 846
	-15	V	CES-A-LNA-15V	071 847
	-25	V	CES-A-LNA-25V	071 975
	-50	V	CES-A-LNA-50V	077 795
	-05	P	CES-A-LNA-05P	077 806
	-10	P	CES-A-LNA-10P	077 807
	-15	P	CES-A-LNA-15P	084 682

Read head CES-A-LNA-SC

SIBE Schweiz

- **Cube-shaped design 42 x 25 mm**
- **M8 plug connector (snap-action and screw terminals)**
  (M8 connection cable see page 64)
- **In combination with evaluation units CES-A-A...**
  and actuators CES-A-BBA

Dimension drawing type CES-A-LNA-SC

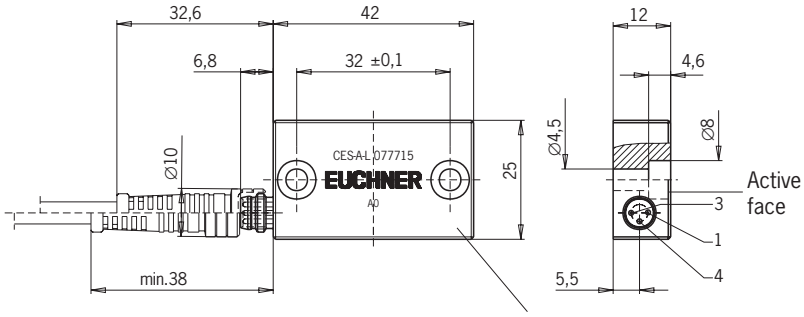

2 safety screws M4x14 included

Active face

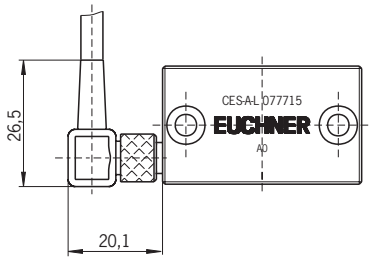

Cable outlet with angled plug connector

Notes on installation

- The connection cable must only be extended using EUCHNER plug connectors and adequate consideration must be given to EMC during assembly (see page 66). Intermediate terminals must not be used.
- Actuator and read head must be fitted so that:
  - The active faces (front faces) are at the switch-on distance 0.8 x S_{a0} or closer (see technical data) with the safety guard closed.
  - They are not used as a mechanical stop.
  - They are positively mounted on the safety guard, e.g. by using the safety screws included.

Safety precautions

- If the read head and/or actuator is/are installed flush, the switching distance changes as a function of the installation depth and the safety guard material.

Typical operating distance

With evaluation unit CES-A-ABA-01 and actuator CES-A-BBA

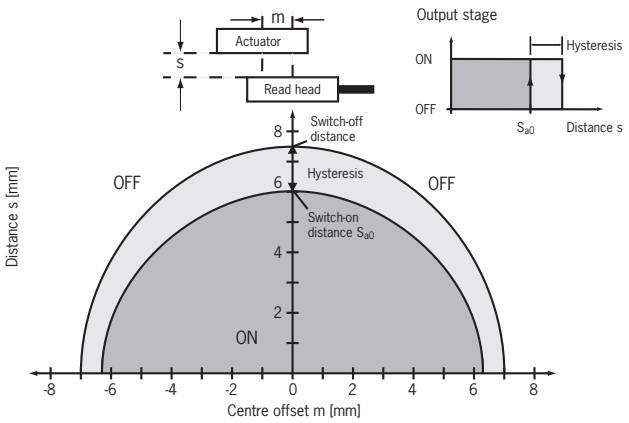

With evaluation unit CES-A-ABA-01B/CES-A-AEA...
and actuator CES-A-BBA

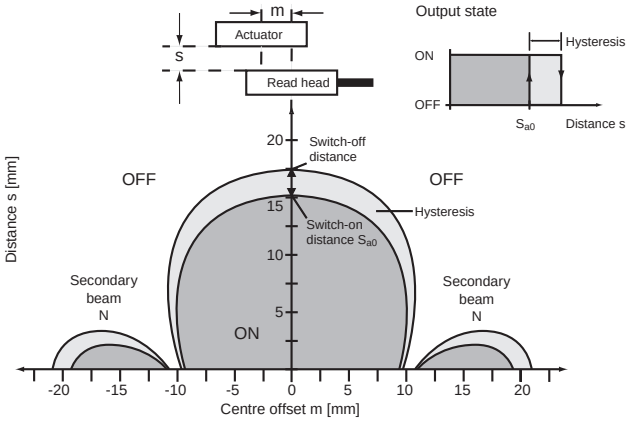

For a side approach direction for the actuator and read head, a minimum distance of s = 3 mm must be maintained so that the operating distance of the side lobes is not entered.

Technical data

Parameters	Value			Unit
	min.	typ.	max.	
Housing material	Fortron, reinforced thermoplastic, fully encapsulated			
Dimensions	42 x 25 x 12			mm
Weight (incl. 10 m cable)	0.3			kg
Ambient temperature	-25	-	+70	°C
Degree of protection	IP67			
Installation position	Any			
Method of operation	Inductive			
Dynamic data transfer to the evaluation unit	2			kbit/s
Power supply	Via evaluation unit			
Dwell time [1]	0.5	-	-	s
Operating distance for center offset m = 0 [2] (Evaluation unit CES-A-ABA-01 with CES-A-BBA)				
- Safe switch-off distance S_{ar}	-	-	23	
Cable length l = 0 to 25 m				
- Switch-on distance S_{a0}	5	6	-	mm
- Switching hysteresis	0.5	1.5	-	
Cable length l ≥ 25 to 50 m				
- Switch-on distance S_{a0}	4	4.8	-	
- Switching hysteresis	0.4	1.2	-	
Operating distance for center offset m = 0 [3] (Evaluation unit CES-A-ABA-01B/CES-A-AEA-04B with CES-A-BBA)				
- Safe switch-off distance S_{ar}	-	-	32	
Cable length l = 0 to 25 m				
- Switch-on distance S_{a0}	10	15	-	mm
- Switching hysteresis	0.5	2	-	
Cable length l ≥ 25 to 50 m				
- Switch-on distance S_{a0}	8	12	-	
- Switching hysteresis	0.4	1.6	-	
Connection	M8 plug connector (snap-action and screw terminals), 3-pin			
Connection cable	-	-	50	m

1) The dwell time is the time that the actuator must be inside or outside the operating distance.
2) These values apply for flush installation of the read head and the actuator in aluminum.
3) These values apply for surface installation of the read head and the actuator.

Pin assignment

Read head with plug connector

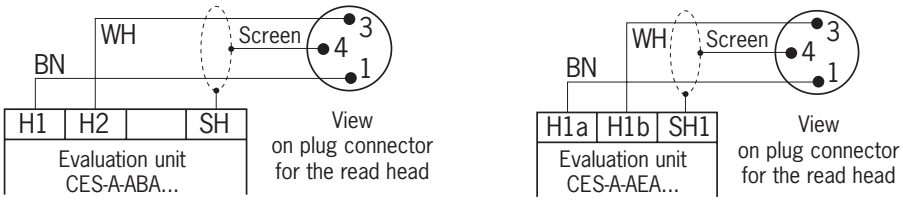

Ordering table

Item	Order No.
CES-A-LNA-SC	077 715

Read head CES-A-LCA...

- **Cube-shaped design 42 x 25 mm**
- **Plastic PE-HD housing material, suitable for use in aggressive media (e.g. acids, alkaline)**
- **In combination with evaluation units CES-A-A... and actuators CES-A-BCA**

Dimension drawing type CES-A-LCA...

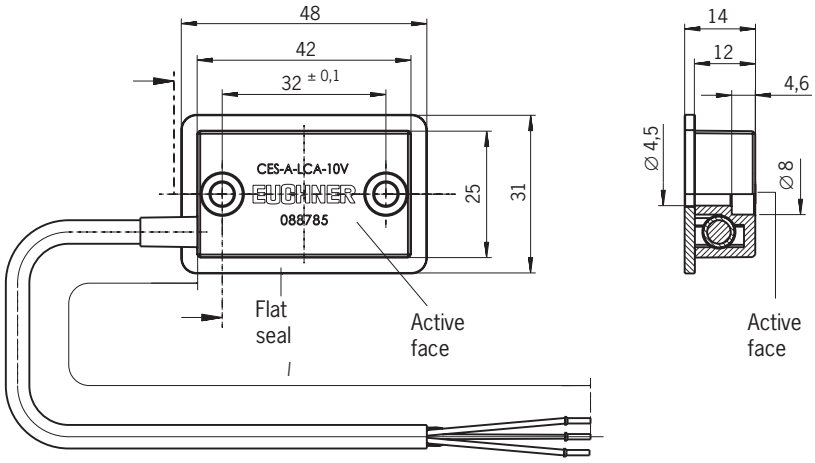

2 safety screws M4x14 included

Flat seal included

Notes on installation

- The flat seal provided must be used during assembly.
- The connection cable must only be extended using EUCHNER plug connectors and adequate consideration must be given to EMC during assembly (see page 66). Intermediate terminals must not be used.
- Actuator and read head must be fitted so that:
  - The active faces (front faces) are at the switch-on distance 0.8 x S_{a0} or closer (see technical data) with the safety guard closed.
  - They are not used as a mechanical stop.
  - They are positively mounted on the safety guard, e.g. by using the safety screws included.

Safety precautions

- If the read head and/or actuator is/are installed flush, the switching distance changes as a function of the installation depth and the safety guard material.

Typical operating distance

With evaluation unit CES-A-ABA-01 and actuator CES-A-BBA

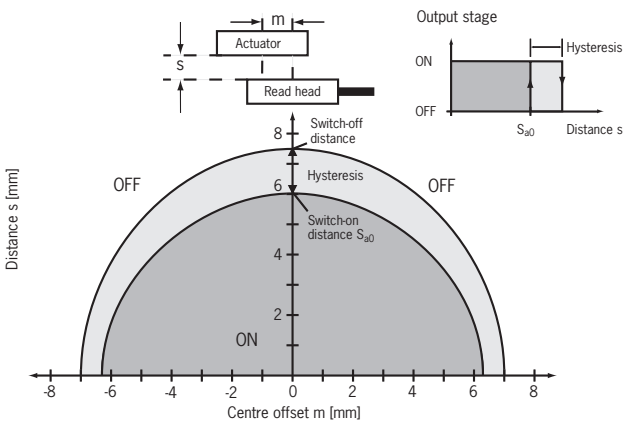

With evaluation unit CES-A-ABA-01B/CES-A-AEA... and actuator CES-A-BBA

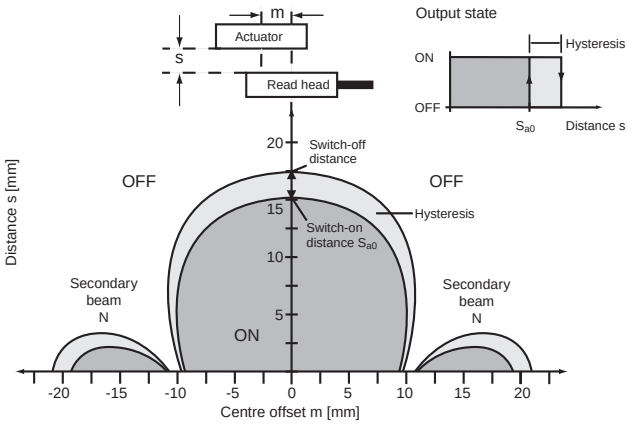

For a side approach direction for the actuator and read head, a minimum distance of s = 3 mm must be maintained so that the operating distance of the side lobes is not entered.

Technical data

Parameters	Value			Unit
	min.	typ.	max.	
Housing material	Plastic PE-HD without reinforcing, fully encapsulated			
Flat seal material	Fluororubber 75 FPM 4100			
Dimensions	42 x 25 x 12			mm
Weight (incl. 10 m cable)	0.3			kg
Ambient temperature	-25	-	+50	°C
Degree of protection	IP67			
Installation position	Any			
Method of operation	Inductive			
Dynamic data transfer to the evaluation unit	2			kbit/s
Power supply	Via evaluation unit			
Dwell time [1]	0.5	-	-	s
Operating distance for center offset m = 0 [2] (Evaluation unit CES-A-ABA-01 with CES-A-BBA)				
- Safe switch-off distance S_{ar}	-	-	23	
Cable length l = 0 to 25 m				
- Switch-on distance S_{a0}	5	6	-	mm
- Switching hysteresis	0.5	1.5	-	
Cable length l ≥ 25 to 50 m				
- Switch-on distance S_{a0}	4	4.8	-	
- Switching hysteresis	0.4	1.2	-	
Operating distance for center offset m = 0 [3] (Evaluation unit CES-A-ABA-01B/CES-A-AEA... with CES-A-BBA)				
- Safe switch-off distance S_{ar}	-	-	32	
Cable length l = 0 to 25 m				
- Switch-on distance S_{a0}	10	15	-	mm
- Switching hysteresis	0.5	2	-	
Cable length l ≥ 25 to 50 m				
- Switch-on distance S_{a0}	8	12	-	
- Switching hysteresis	0.4	1.6	-	
Connection cable	Hard-wired encapsulated connection cable, with crimped ferrules PVC, ∅ 4.6 mm			
Cable length	See ordering table		50	m

1) The dwell time is the time that the actuator must be inside or outside the operating distance.
2) These values apply for flush installation of the read head and the actuator in aluminum.
3) These values apply for surface installation of the read head and the actuator.

Pin assignment

Read head with connection cable

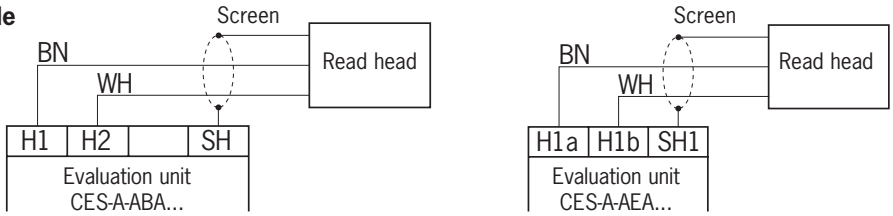

Ordering table

Series	Cable type Cable length „l“ (meters)	V = PVC P = PUR	Item	Order No.
CES-A-LCA...	-10	V	CES-A-LCA-10V	088 785

Read head series CES-A-LMN-SC

- **Cylindrical design M12**
- **M8 plug connector (snap-action and screw terminals)**
  (M8 connection cable see page 64)
- **In combination with evaluation units CES-A-A...**
  and actuators CES-A-BMB

Dimension drawing type CES-A-LMN-SC

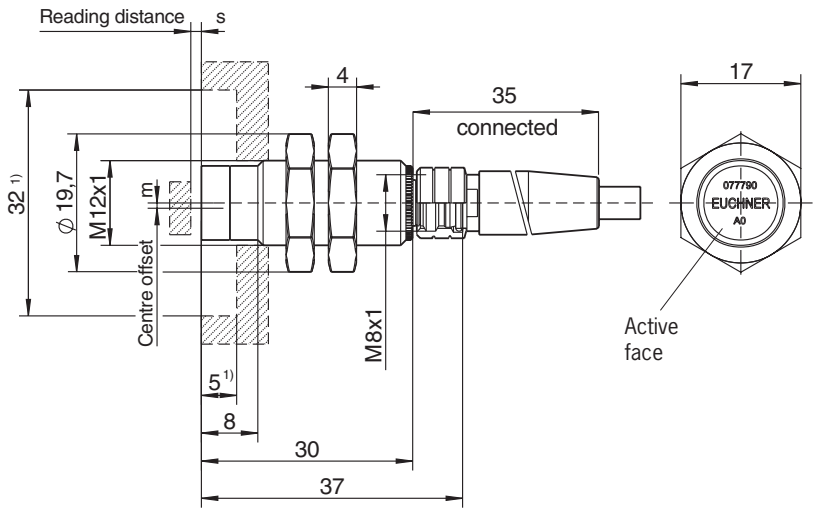

1)Clear zone (area of the active face without metal housing)

Notes on installation

- The connection cable must only be extended using EUCHNER plug connectors and adequate consideration must be given to EMC during assembly (see page 66). Intermediate terminals must not be used.
- Actuator and read head must be fitted so that:
  - The active faces (front faces) are at the switch-on distance 0.8 x S_{a0} or closer (see technical data) with the safety guard closed.
  - They are not used as a mechanical stop.
  - They are positively connected to the safety guard, e.g. by using adhesive.
- The read head is allowed to be installed as a maximum up to the clear zone (area of the active face without metal housing).

Safety precautions

- If the read head is installed flush, the switching distance changes as a function of the installation depth and the safety guard material.

Typical operating distance

With evaluation unit CES-A-ABA-01 and actuator CES-A-BMB

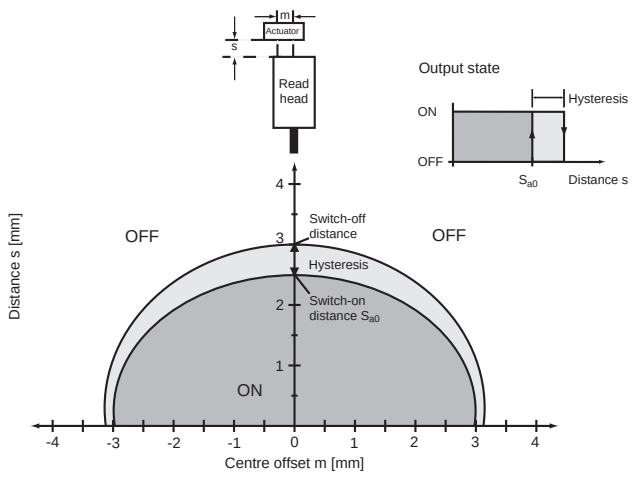

With evaluation unit CES-A-ABA-01B/CES-A-AEA...
and actuator CES-A-BMB

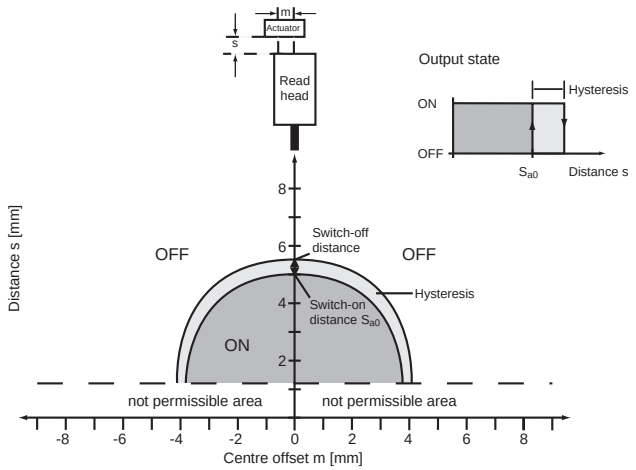

A minimum distance of s = 1.2 mm must be maintained.

Technical data

Parameters	Value			Unit
	min.	typ.	max.	
Housing material	Nickel-plated CuZn housing sleeve Plastic PBT GF20 cap			
Dimensions	M12 x 1, length 38			mm
Weight (incl. 10 m cable)	0.2			kg
Ambient temperature	-25	-	+70	°C
Degree of protection	IP67			
Installation position	Any			
Method of operation	Inductive			
Dynamic data transfer to the evaluation unit	2			kbps
Power supply	Via evaluation unit			
Dwell time [1]	0.5	-	-	s
Operating distance for center offset m = 0 [2] (Evaluation unit CES-A-ABA-01 with CES-A-BMB) - Safe switch-off distance S_{ar} Cable length l = 0 to 10 m - Switch-on distance S_{a0} - Switching hysteresis	 - 1.6 0.2	 - 2.5 0.3	 8.5 - -	mm
Operating distance for center offset m = 0 [2] (Evaluation unit CES-A-ABA-01B/CES-A-AEA-04B with CES-A-BMB) - Safe switch-off distance S_{ar} Cable length l = 0 to 10 m - Switch-on distance S_{a0} - Switching hysteresis	 - 3.5 0.1	 - 5 0.3	 10 - -	mm
Connection	M8 plug connector (snap-action and screw terminals), 3-pin			
Connection cable	-	-	15	m

1) The dwell time is the time that the actuator must be inside or outside the operating distance.
2) These values apply for surface installation of the read head in steel.

Pin assignment

Read head with plug connector

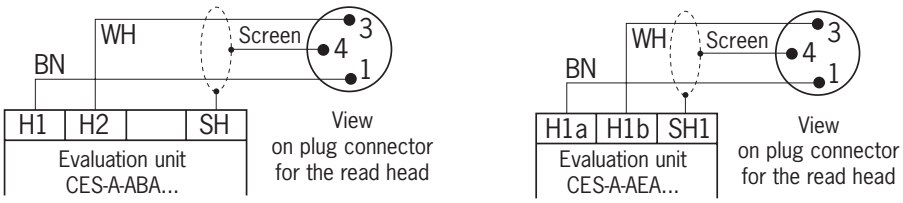

Ordering table

Item	Order No.
CES-A-LMN-SC	077 790

Actuator CES-A-BBA / CES-A-BCA

- **Cube-shaped design 42 x 25 mm**
- **CES-A-BCA suitable for use in aggressive media (e.g. acids, alkaline)**
- **In combination with evaluation units CES-A-A..., read head CES-A-LNA... and safety switches CES-A-C5...**

Dimension drawing CES-A-BBA

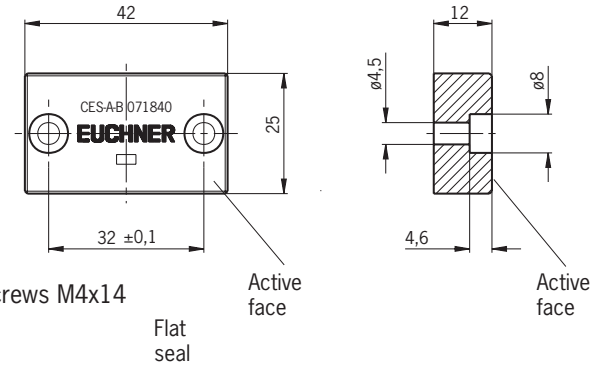

2 safety screws M4x14 included

Notes on installation

- Actuator and read head must be fitted so that:
  - The active faces (front faces) are at the switch-on distance 0.8 x S_{a0} or closer (see technical data) with the safety guard closed.
  - They are not used as a mechanical stop.
  - They are positively mounted on the safety guard, e.g. by using the safety screws included.
- CES-A-BCA: The flat seal provided must be used during assembly.

Dimension drawing CES-A-BCA

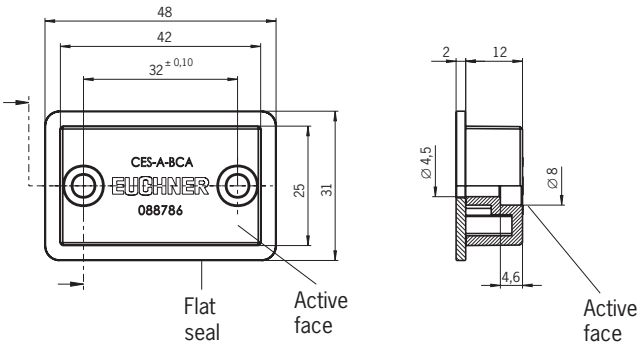

2 safety screws M4x14 included

Technical data

Parameters		Value			Unit
		min.	typ.	max.	
Housing material	CES-A-BBA	Fortron, reinforced thermoplastic, fully encapsulated			
	CES-A-BCA	Plastic PE-HD without reinforcing, fully encapsulated			
Flat seal material	CES-A-BCA	Fluororubber 75 FPM 4100			
Dimensions		42 x 25 x 12			mm
Weight		0.02			kg
Ambient temperature	CES-A-BBA	-25	-	+70	°C
	CES-A-BCA	-25	-	+50	°C
Degree of protection		IP67			
Installation position		Active face opposite read head			
Power supply		Inductive via read head			
Dwell time [1]		0.5	-	-	s

1) The dwell time is the time that the actuator must be inside or outside the operating distance.

Ordering table

Item	Order No.
CES-A-BBA	071 840
CES-A-BCA (flat seal included)	088 786

Position Actuator CES-A-NBA-.

▶ **In combination with safety switch CES-A-S5H-01**

Dimension drawing

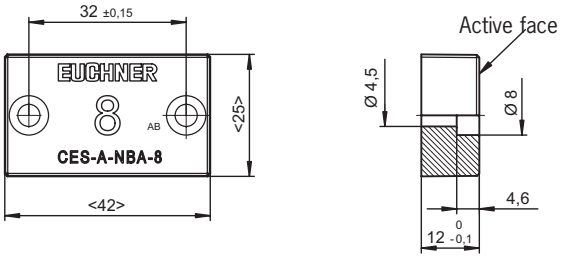

2 safety screws M4x14 are supplied

Notes on installation

- Actuator and read head must be fitted so that:
  - The active faces (front faces) are at the switch-on distance 0,8 x S_{a0} or closer (see technical data) with the safety guard closed.
  - They are not used as a mechanical stop.
  - They are positively mounted on the safety guard, e.g. by using the safety screws included.

Technical data

Parameters	Value			Unit
	min.	typ.	max.	
Housing material	Fortron, reinforced thermoplastic, fully encapsulated			
Housing color	Green			
Dimensions	42 x 25 x 12			mm
Weight	0,02			kg
Ambient temperature	-25	-	+70	°C
Degree of protection	IP67			
Installation position	Active face opposite read head			
Power supply	Inductive via read head			
Storage capacity	4 bits (1 BCD digit)			s
Data retention time (T = 22°C)	20 years			

Ordering table

Item	Actuator number	Order No.
CES-A-NBA-2	2	090 682
CES-A-NBA-3	3	090 683
CES-A-NBA-4	4	090 684
CES-A-NBA-5	5	090 685
CES-A-NBA-6	6	090 686
CES-A-NBA-7	7	090 687
CES-A-NBA-8	8	090 688
CES-A-NBA-9	9	090 689
CES-A-NBA-A	A	090 690
CES-A-NBA-B	B	090 691
CES-A-NBA-C	C	090 692
CES-A-NBA-D	D	090 693
CES-A-NBA-E	E	090 694
CES-A-NBA-F	F	090 695

Actuator CES-A-BDA

- **Round design ∅ 20 mm**
- **In combination with evaluation units CES-A-ABA-01 and read head CES-A-LNA/LCA...**

Dimension drawing

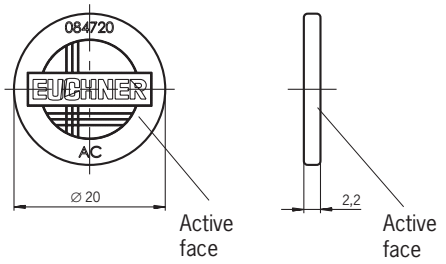

Typical operating distance

With evaluation unit CES-A-ABA-01 and actuator CES-A-LNA

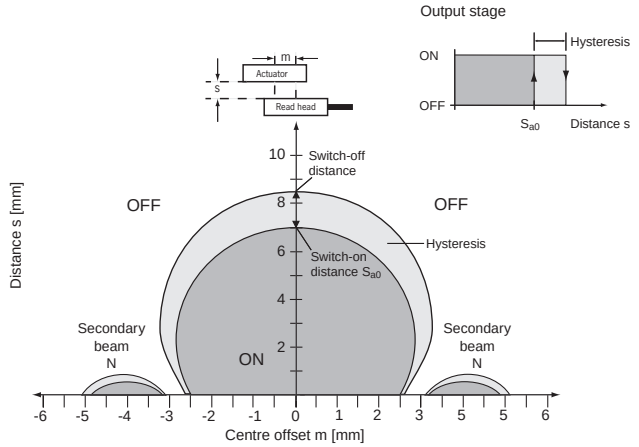

Notes on installation

- Assembly on or in aluminum is not allowed.
- The safety guard must be designed so that:
  - A hazard is excluded up to a distance of s_{ar} = 24 mm (safe switching distance).
  - In the case that the adhesive joint for the actuator breaks, it is ensured that the actuator leaves the operating distance with a distance > s_{ar} when the safety guard is opened.
- Actuator and read head must be fitted so that:
  - The active faces (front faces) are at the switch-on distance 0.8 x S_{a0} or closer (see technical data) with the safety guard closed.
  - They are not used as a mechanical stop.
- For a side approach direction for the actuator and read head, a minimum distance of s = 1 mm must be maintained so that the operating distance of the side lobes is not entered.

Switching distances with read head cable length 0 to 25 m [1)]

Surrounding material / installation method		Non-metallic	Steel, surface	Steel, flush	
Switch-on distance s_{a0}	min./typ.	6.0 / 7.0	3.6 / 4.4	3.0 / 3.6	mm
Switching hysteresis	min./typ.	0.5 / 1.5	0.4 / 1.2	0.3 / 1.0	
Safe switch-off distance s_{ar}	max.	24			

1) With a cable length from 25 to 50 m, the values for the switch-on distance and the switching hysteresis reduce to 80 % of the value given.

Technical data

Parameters	Value			Unit
	min.	typ.	max.	
Housing material	Plastic PC			
Dimensions	∅ 20 x 2.2			mm
Weight	0.0008			kg
Ambient temperature	-25	-	+70	°C
Degree of protection	IP67			
Installation position	Active face opposite read head			
Power supply	Inductive via read head			
Dwell time [2)]	0.5	-	-	s

2) The dwell time is the time that the actuator must be inside or outside the operating distance.

Ordering table

Item	Order No.
CES-A-BDA	084 720

Actuator CES-A-BMB

- **Cylindrical design M12 x 0.75**
- **In combination with evaluation units CES-A-A...,**
  read head CES-A-LMN-SC and read head CES-A-LNA.../LCA...
  (operating distance on request)

Dimension drawing

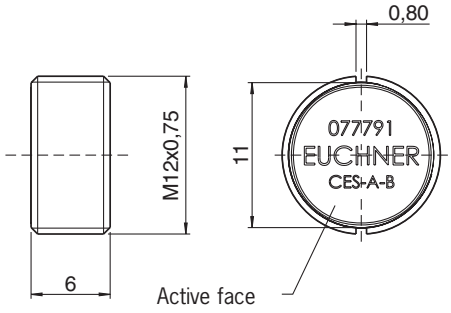

Notes on installation

- Actuator and read head must be fitted so that:
  - The active faces (front faces) are at the switch-on distance 0.8 x S_{a0} or closer (see technical data) with the safety guard closed.
  - They are not used as a mechanical stop.
  - They are positively connected to the safety guard, e.g. by using adhesive.
- The actuator can be screwed into the M12 x 0.75 thread provided with the aid of an insertion tool (Order No. 037 662).
- Flush installation of the actuator in steel is allowed.

Technical data

Parameters	Value			Unit
	min.	typ.	max.	
Housing material	Stainless steel, Niro			
Dimensions	M12 x 0.75, depth 6			mm
Weight	0.002			kg
Ambient temperature	-25	-	+70	°C
Degree of protection	IP67			
Installation position	Active face opposite read head			
Power supply	Inductive via read head			
Dwell time [1]	0.5	-	-	s

1) The dwell time is the time that the actuator must be inside or outside the operating distance.

Ordering table

Item	Order No.
CES-A-BMB	077 791

Non-contact safety switches CEM

- **With transponder coding**
- **Integrated solenoid (without monitoring of the guard locking)**
- **Up to safety category 4**

Functional description

Non-contact safety switches CES have no guard locking. Therefore, there is a risk that the machining process may be interrupted if the safety door is opened unintentionally.
The safety switch CEM is the ideal solution for all customers who must achieve a high level of safety when securing a safety guard and also need guard locking to protect the process.
The guard locking on the safety switch CEM is not monitored by the system as per EN 1088. As a consequence, the switch can be used in all applications in which there are no hazardous, overtravel machine movements.
If the overtravel machine movements do not represent a hazard for the operator, the safety switch CEM can be used.

Design and functionality
The safety switch CEM comprises a CEM actuator and read head. A CES read head and a solenoid are integrated into the CEM read head. The CEM read head is connected to the CES evaluation unit with a round M8 plug connector. The CEM actuator of identical design also has a metal plate in addition to the transponder; this plate acts as an armature for the solenoid coil.
When the safety door is closed, the CEM actuator enters the operating distance of the CEM read head. The transponder signals are transferred, and then the evaluation unit closes the safety contacts and sets the OUT output "high". By applying voltage to the solenoid for the CEM read head, strong magnetic forces can be generated between the coil (in the read head) and the armature (in the actuator).
Depending on the switch design – EUCHNER provides two different housing sizes – adhesive forces of approx. 500 N or 1000 N respectively are applied between the CEM actuator and the CEM read head. Practical experience has shown that these magnetic adhesive forces effectively prevent any opening, even if the user applies an enormous amount of effort.

Use of the switch even in extremely harsh environments
The safety switches CEM have an extremely robust design. The high degree of protection IP 67 and the metal housing allow the switch to be used in extremely harsh environments. The armature plate for the CEM actuator has spring bearings and can be tilted up to an angle of ± 4°. Therefore, when a maladjusted safety door is closed, the CEM actuator adjusts itself independently to the surface of the CEM read head. It is not necessary to readjust the safety door when using the safety switch CEM. When mounting the safety switch CEM, it is only necessary to ensure that the CEM actuator is guided in front of the CEM read head when the door is closed, so that the strong adhesive forces can be generated.
Because the switch has only a small number of moving parts which can wear, the mechanical life of the CEM switch is virtually unlimited.

Different designs
EUCHNER provides two CEM housing designs. The two versions differ in their dimensions, according to the size of the solenoid. The safety switches CEM with an adhesive force of 1000 N are used with large, heavy safety doors. This read head has an additional M8 plug connector for connecting an external LED display. When voltage is applied to the coil, it is indicated to the user that the safety door is in the *locking position*. An LED display in the immediate vicinity of the door handle is extremely advantageous, especially in the case of large, solid doors.
The smaller version of the safety switch CEM has an adhesive force of approx. 500 N. It is suitable for securing smaller safety doors and safety flaps.
An LED indicator in the M8 plug on the CEM A LE05K S2 read head indicates to the user when voltage is applied to the solenoid.

Highest possible level of safety is achieved
EUCHNER offers various evaluation units for the safety switch CEM:

- For the connection of one read head, the evaluation unit CES-A-ABA-01B (safety category 3)
- For the connection of one/two read heads, the evaluation unit CES-A-ABA-02B (safety category 4)
- For the connection of up to four read heads, the evaluation unit CES-A-ABA-04B (safety category 4).

In combined operation, it is possible to connect both CES read heads (without guard locking) and CEM read heads to an evaluation unit.
In the case of relatively large systems with several safety doors to be monitored, it is advisable to lock the frequently used doors during the production cycle – e.g. the doors in a cycling loading station – to prevent the process being interrupted if the door is opened. On doors that are not opened very often – e.g. maintenance doors – a safety switch without guard locking is adequate in many applications.

As the safety switch CEM only safely monitors the position of the door and not the function of the guard locking, the switch can be used in all systems without dangerous, overtravel machine movements. The solenoid has the task of protecting the process; it effectively prevents the unintentional opening of the safety guard by the user.

With the two safety switches CES and CEM, EUCHNER has launched on the market a totally new safety concept that is significantly different to competitive solutions.

Your advantages

- Safety switch with transponder coding
  - Every actuator is unique
  - Absolutely secure against tampering
- Very high level of safety with one switch
  - With evaluation unit CES-A-ABA-01B safety category 3 according to EN 954-1
  - With evaluation unit CES-A-AEA-02B and CES-A-AEA-04B safety category 4 according to EN 954-1
- Integrated solenoid for process protection
  - Unintentional opening of the safety door is prevented
- Safety switch and solenoid form a single compact unit
- High adhesive forces from the solenoids (500 N or 1000 N)
  - Protection of the machining process
- Simple operating principle
  - No wearing parts
- Robust housing for harsh environments
- Connection via M8 plug connector
  - Low wiring effort
  - Easy to replace if servicing is required
- Approval from BG

Read head CEM-A-LE05K-S2

- **Adhesive force 500 N**
- **In combination with evaluation unit CES-A-ABA-01B/ CES-A-AEA.../CES-A-F1B-01B-AS1 and actuator CEM-A-BE05**
- **M8 plug connector**
  Connection cable for evaluation unit, see page 64
  Connection cable for solenoid operating voltage, see page 62

Dimension drawing

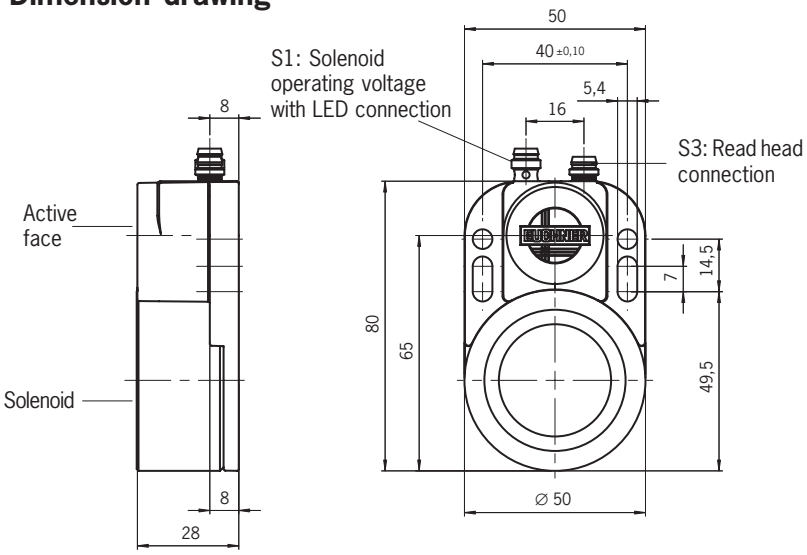

Note

- The actuators and read heads CEM... can only be used with the evaluation units given above.
- The plug connectors S1 and S3 are suitable for snap-action and screw terminals.
- For detailed information see the operating instructions for the CES evaluation unit used.

Notes on installation

- The connection cable to the CES evaluation unit must only must be extended using EUCHNER plug connectors and adequate consideration must be given to EMC during assembly (see page 66). Intermediate terminals must not be used.
- Actuator and read head must be fitted so that:
  - They are positively connected to the safety guard, e.g. by using safety screws.
  - When the safety door is opened, the actuator is moved in the axial direction (frontal) away from the read head.

Notes on the electrical connection

- All the electrical connections must either be isolated from the mains supply by a safety transformer according to EN/IEC 61558 with limited output voltage in the event of a fault, or by other equivalent isolation measures.
- If a common power supply is used, all the inductive and capacitive loads (e.g. contactors) connected to the power supply must be connected to appropriate interference suppression units.

Safety precautions

- The surface of the solenoid and the mating plate may become hot.
  Protection against accidental contact or adequate heat dissipation must be provided by mounting the read head on metal.
- The safety switch CEM... with solenoid is not allowed to be used for the protection of personnel as per EN 1088.

Typical operating distance

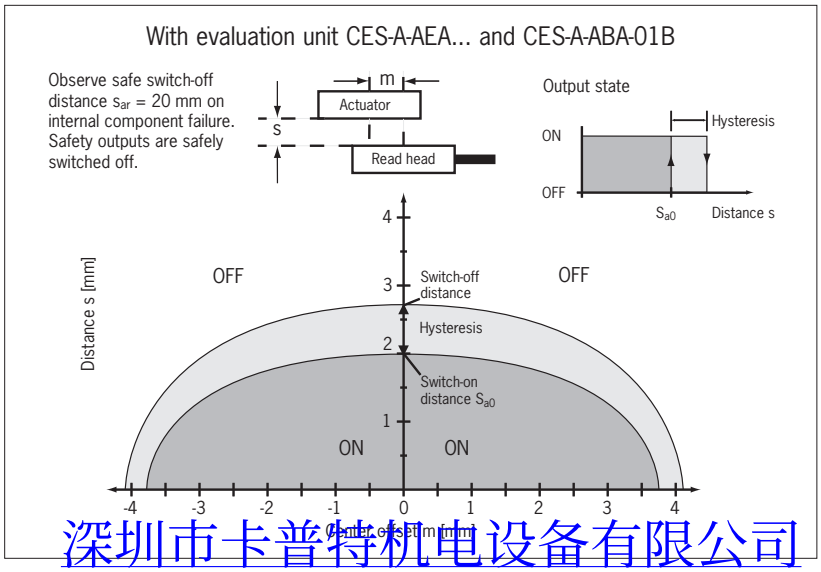

Direction of opening

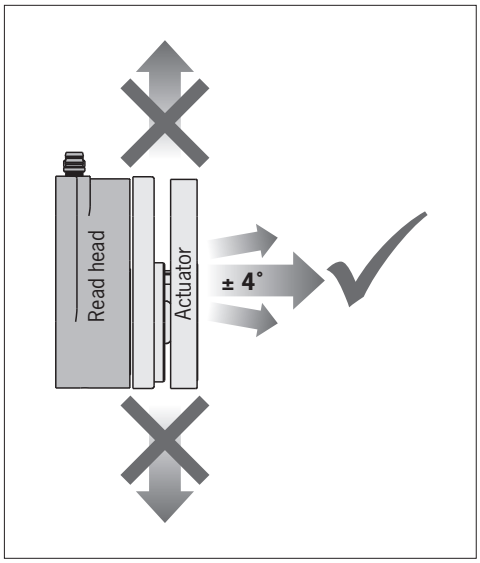

Technical data

Parameters	Value			Unit
General	min.	typ.	max.	
Housing material	Aluminum			
Material, read head CES	Plastic (PPS)			
Solenoid material	Galvanized steel			
Weight	Approx. 0.3			kg
Ambient temperature	-25	-	+50	°C
Degree of protection according to IEC 60529	IP67			
Installation position	Any			
Solenoid				
Adhesive force in axial direction	500			N
Adhesive force due to remanence [1]	Approx. 15			N
Solenoid center offset max.	± 2.5			mm
Solenoid operating voltage U_B plug S1	24 +10%/-15%			V DC
Reverse polarity protection	Yes			
Current consumption	100			mA
Power consumption	Approx. 2.5			W
Solenoid operating voltage connection	M8 plug connector (plug), 4-pin Yellow LED integrated in the plug connector (see circuit diagram)			
Read head				
Operating distance for center offset m = 0 - Safe switch-off distance S_{ar}	-	-	20	mm
Cable length l = 0 to 25 m - Switch-on distance S_{a0} - Switching hysteresis	- -	2 0.7	- -	mm
Cable length l = 25 to 50 m - Switch-on distance S_{a0} - Switching hysteresis	- -	1.6 0.6	- -	mm
Connection evaluation unit plug S3	M8 plug connector (plug), 3-pin			
Connection cable	-	-	50	m

1) The residual remanence disappears immediately when the door is opened and over time in solenoids through which there is no current flow.

Pin assignment

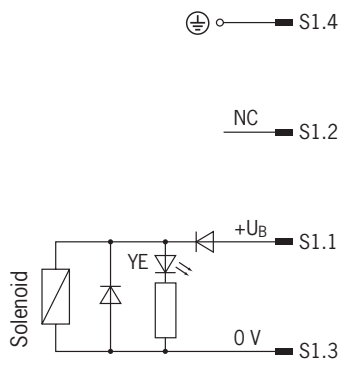

Circuit diagram connection of solenoid operating voltage S1

S1/M8 plug

Solenoid operating voltage	
S1.1	+U_B/ DC 24V
S1.2	-
S1.3	0 V/GND
S1.4	⏚

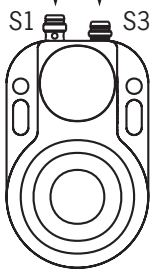

S3/M8 plug

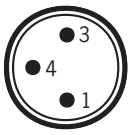

Evaluation unit CES	
S3.1	H1
S3.3	H2
S3.4	SH (screen)

Ordering table

Item	Adhesive force [N]	Order No.
CEM-A-LE05K-S2	500	094 800

Read head CEM-A-LE05R-S2

- **Adhesive force 500 N**
- **Without remanence**
- **In combination with evaluation unit CES-A-ABA-01B/ CES-A-AEA.../CES-A-F1B-01B-AS1 and actuator CEM-A-BE05**
- **M8 plug connector**

Dimension drawing

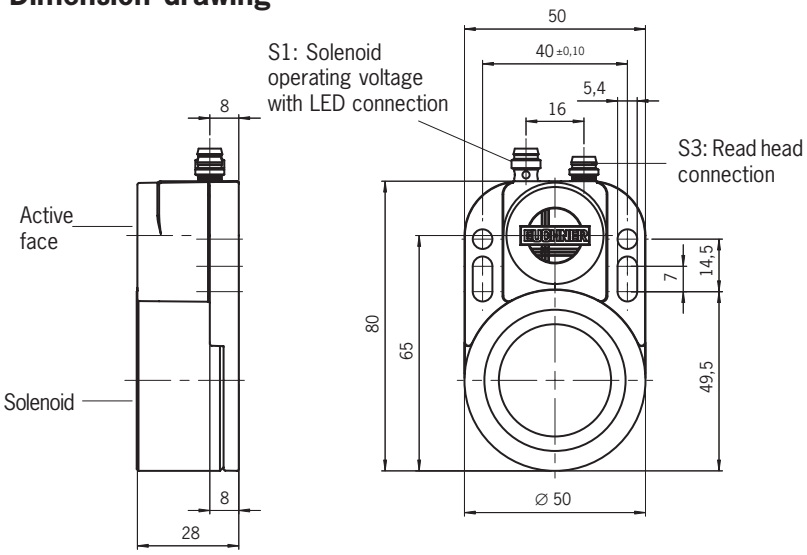

Note

- The actuators and read heads CEM... can only be used with the evaluation units given above.
- The plug connectors S1 and S3 are suitable for snap-action and screw terminals.
- For detailed information see the operating instructions for the CES evaluation unit used.

Notes on installation

- The connection cable to the CES evaluation unit must only be extended using EUCHNER plug connectors and adequate consideration must be given to EMC during assembly. Intermediate terminals must not be used.
- Actuator and read head must be fitted so that:
  - They are positively connected to the safety guard, e.g. by using safety screws.
  - When the safety door is opened, the actuator is moved in the axial direction (frontal) away from the read head.

Notes on the electrical connection

- All the electrical connections must either be isolated from the mains supply by a safety transformer according to EN/IEC 61558 with limited output voltage in the event of a fault, or by other equivalent isolation measures.
- If a common power supply is used, all the inductive and capacitive loads (e.g. contactors) connected to the power supply must be connected to appropriate interference suppression units.

Safety precautions

- The surface of the solenoid and the mating plate may become hot.
  Protection against accidental contact or adequate heat dissipation must be provided by mounting the read head on metal.
- The safety switch CEM... with solenoid is not allowed to be used for the protection of personnel as per EN 1088.

Typical operating distance

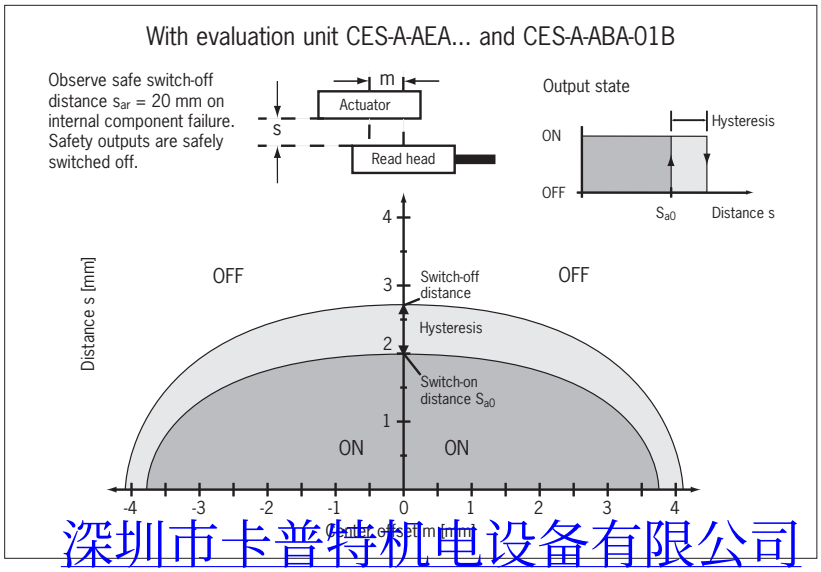

Direction of opening

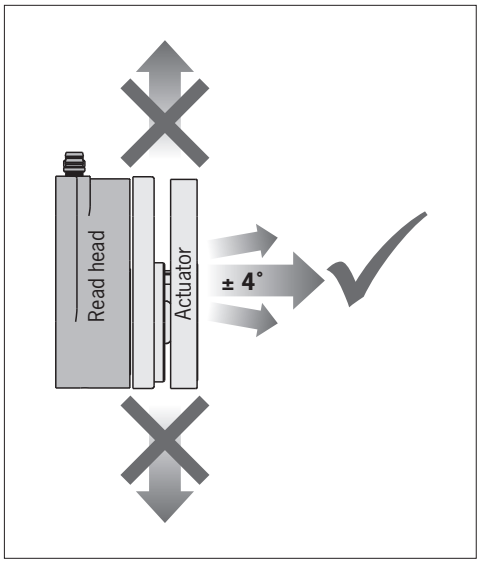

Technical data

Parameters	Value			Unit
General	min.	typ.	max.	
Housing material	Aluminum			
Material, read head CES	Plastic (PPS)			
Solenoid material	Galvanized steel			
Weight	Approx. 0.3			kg
Ambient temperature	-25	-	+50	°C
Degree of protection according to IEC 60529	IP67			
Installation position	Any			
Solenoid				
Adhesive force in axial direction	500			N
Adhesive force due to remanence	Approx. 0.5			N
Solenoid center offset max.	± 2,5			mm
Solenoid operating voltage U_B plug S1	20.4	24	26.4	V DC
Reverse polarity protection	Yes			
Current consumption at connection S1.2 (U_B) at connection S1.1 (M_{ON})	100 15			mA
Power consumption	Approx. 2.8			W
Switch-off delay	500			ms
Solenoid operating voltage connection	M8 plug connector (plug), 4-pin Yellow LED integrated in the plug connector (see circuit diagram)			
Read head				
Operating distance for center offset m = 0 - Safe switch-off distance S_{ar}	-	-	20	mm
Cable length l = 0 to 25 m - Switch-on distance S_{a0} - Switching hysteresis	- -	2 0.7	- -	
Cable length l = 25 to 50 m - Switch-on distance S_{a0} - Switching hysteresis	- -	1.6 0.6	- -	
Connection evaluation unit plug S3	M8 plug connector (plug), 3-pin			
Connection cable	-	-	50	m

Pin assignment

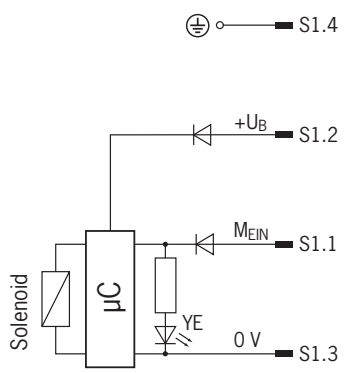

Circuit diagram connection of solenoid operating voltage S1

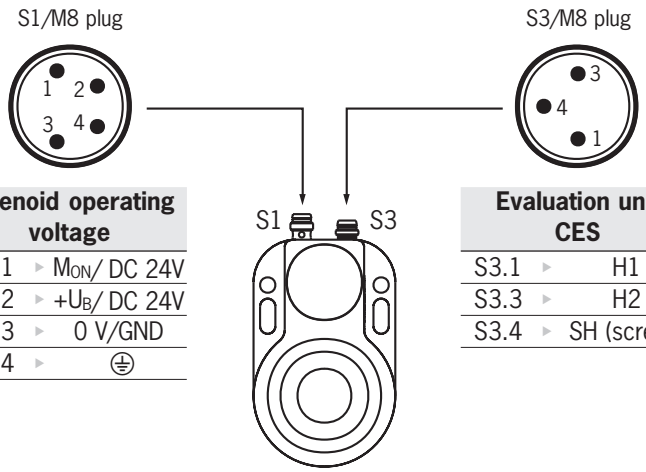

Solenoid operating voltage	
S1.1	M_{ON}/ DC 24V
S1.2	$+U_B$/ DC 24V
S1.3	0 V/GND
S1.4	⏚

Evaluation unit CES	
S3.1	H1
S3.3	H2
S3.4	SH (screen)

Ordering table

Item	Adhesive force [N]	Order No.
CEM-A-LE05R-S2	500	095 792

Read head CEM-A-LH10K-S3

- **Adhesive force 1000 N**
- **In combination with evaluation unit CES-A-ABA-01B/ CES-A-AEA.../CES-A-F1B-01B-AS1 and actuator CEM-A-BH10**
- **Connection for external LED indicator**
- **M8 plug connector**

Connection cable for evaluation unit, see page 64
Connection cable for external LED indicator, see page 63
Connection cable for solenoid operating voltage, see page 62

Dimension drawing

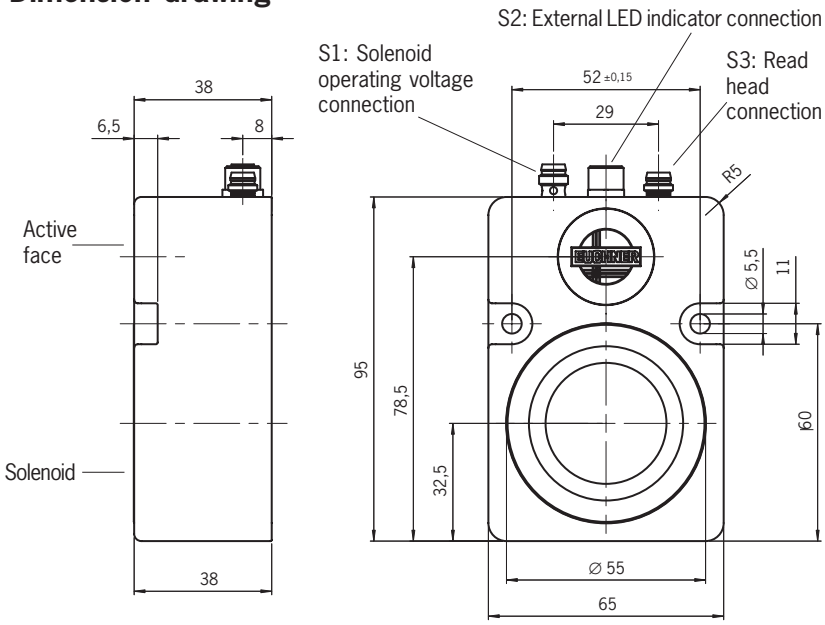

Notes on the electrical connection

- All the electrical connections must either be isolated from the mains supply by a safety transformer according to EN/IEC 61558 with limited output voltage in the event of a fault, or by other equivalent isolation measures.
- If a common power supply is used, all the inductive and capacitive loads (e.g. contactors) connected to the power supply must be connected to appropriate interference suppression units.

Typical operating distance

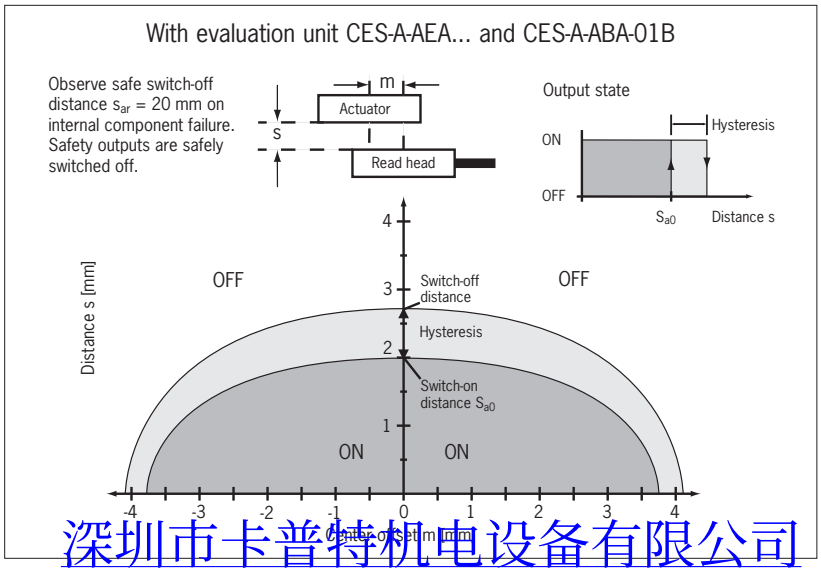

Note

- The actuators and read heads CEM... can only be used with the evaluation units given above.
- The plug connectors S1 and S3 are suitable for snap-action and screw terminals.
- The plug connector S1 does not have an integrated LED.
- For detailed information see the operating instructions for the CES evaluation unit used.

Notes on installation

- The connection cable to the CES evaluation unit must only must be extended using EUCHNER plug connectors and adequate consideration must be given to EMC during assembly (see page 66).
  Intermediate terminals must not be used.
- Actuator and read head must be fitted so that:
  - They are positively connected to the safety guard, e.g. by using safety screws.
  - When the safety door is opened, the actuator is moved in the axial direction (frontal) away from the read head.

Safety precautions

- The surface of the solenoid and the mating plate may become hot.
  Protection against accidental contact or adequate heat dissipation must be provided by mounting the read head on metal.
- The safety switch CEM... with solenoid is not allowed to be used for the protection of personnel as per EN 1088.

Direction of opening

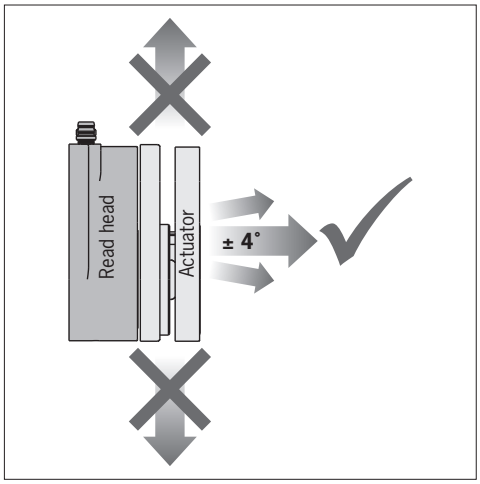

Technical data

Parameters	Value			Unit
General	min.	typ.	max.	
Housing material	Aluminum			
Material, read head CES	Plastic (PPS)			
Solenoid material	Galvanized steel			
Weight	Approx. 0.9			kg
Ambient temperature	-25	-	+50	°C
Degree of protection according to IEC 60529	IP67			
Installation position	Any			
Solenoid				
Adhesive force in axial direction	1000			N
Adhesive force due to remanence [1]	Approx. 60			N
Solenoid center offset max.	± 2.5			mm
Solenoid operating voltage U_B plug 1	24 +10%/-15%			V DC
Reverse polarity protection	Yes			
Current consumption	200			mA
Power consumption	Approx. 5			W
Solenoid operating voltage connection	M8 plug connector (plug), 4-pin			
External LED indicator connection	M8 plug connector (socket), 4-pin			
Read head				
Operating distance for center offset m = 0				mm
- Safe switch-off distance S_{ar}	-	-	20	
Cable length l = 0 to 25 m				
- Switch-on distance S_{a0}	-	2	-	
- Switching hysteresis	-	0.7	-	
Cable length l = 25 to 50 m				
- Switch-on distance S_{a0}	-	1.6	-	
- Switching hysteresis	-	0.6	-	
Connection evaluation unit plug S3	M8 plug connector (plug), 3-pin			
Connection cable	-	-	50	m
Connection external LED indicator plug S2				
Current consumption	-	-	500	mA

1) The residual remanence disappears immediately when the door is opened and over time in solenoids through which there is no current flow.

Pin assignment

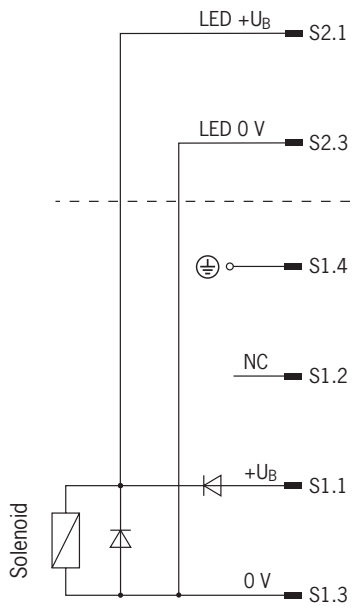

Circuit diagram connection solenoid operating voltage S1 and external LED indicator S2

External LED indicator connection	
S2.1 ▸	LED +U_B
S2.2 ▸	-
S2.3 ▸	LED 0 V
S2.4 ▸	-

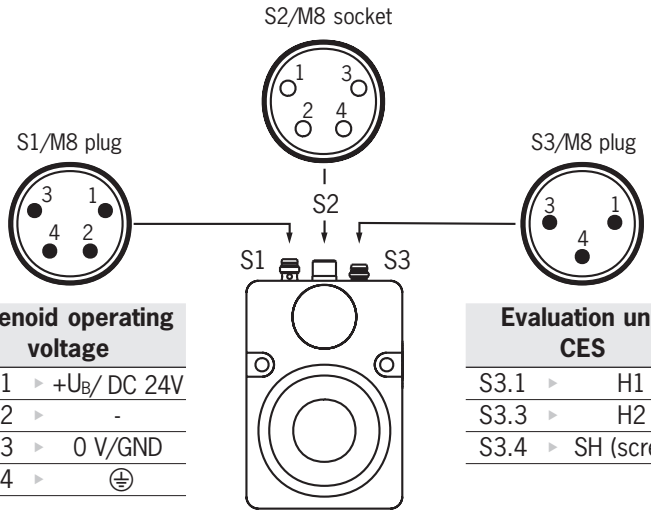

Solenoid operating voltage	
S1.1 ▸	+U_B/ DC 24V
S1.2 ▸	-
S1.3 ▸	0 V/GND
S1.4 ▸	⏚

Evaluation unit CES	
S3.1 ▸	H1
S3.3 ▸	H2
S3.4 ▸	SH (screen)

Ordering table

Item	Adhesive force [N]	Order No.
CES-A-BHI10K-S3	1000	095 170

Read head CEM-A-LH10R-S3

- **Adhesive force 1000 N**
- **Without remanence**
- **In combination with evaluation unit CES-A-ABA-01B/ CES-A-AEA.../CES-A-F1B-01B-AS1 and actuator CEM-A-BH10**
- **Connection for external LED indicator**
- **M8 plug connector**

Dimension drawing

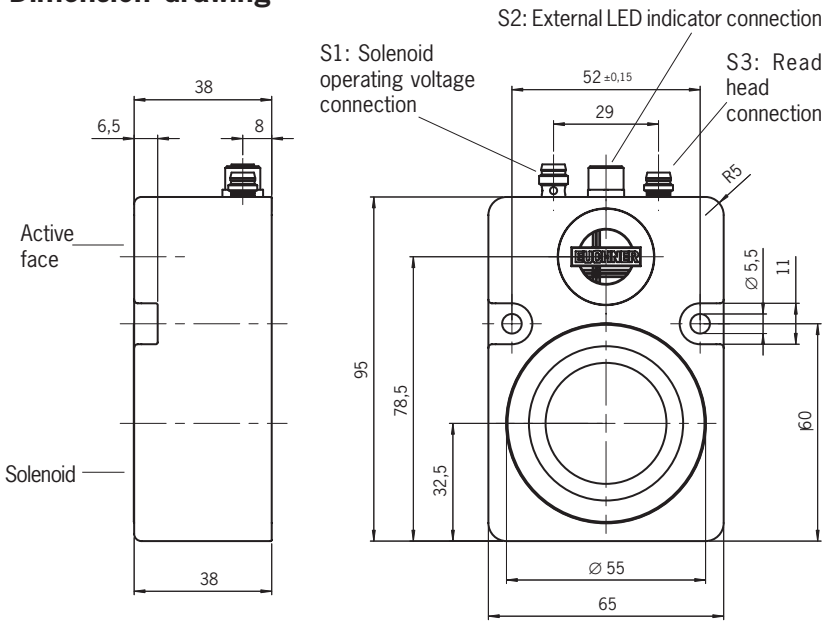

Note

- The actuators and read heads CEM... can only be used with the evaluation units given above.
- The plug connectors S1 and S3 are suitable for snap-action and screw terminals.
- The plug connector S1 does not have an integrated LED.
- For detailed information see the operating instructions for the CES evaluation unit used.

Notes on installation

- The connection cable to the CES evaluation unit must only be extended using EUCHNER plug connectors and adequate consideration must be given to EMC during assembly.
  Intermediate terminals must not be used.
- Actuator and read head must be fitted so that:
  - They are positively connected to the safety guard, e.g. by using safety screws.
  - When the safety door is opened, the actuator is moved in the axial direction (frontal) away from the read head.

Notes on the electrical connection

- All the electrical connections must either be isolated from the mains supply by a safety transformer according to EN/IEC 61558 with limited output voltage in the event of a fault, or by other equivalent isolation measures.
- If a common power supply is used, all the inductive and capacitive loads (e.g. contactors) connected to the power supply must be connected to appropriate interference suppression units.

Safety precautions

- The surface of the solenoid and the mating plate may become hot.
  Protection against accidental contact or adequate heat dissipation must be provided by mounting the read head on metal.
- The safety switch CEM... with solenoid is not allowed to be used for the protection of personnel as per EN 1088.

Typical operating distance

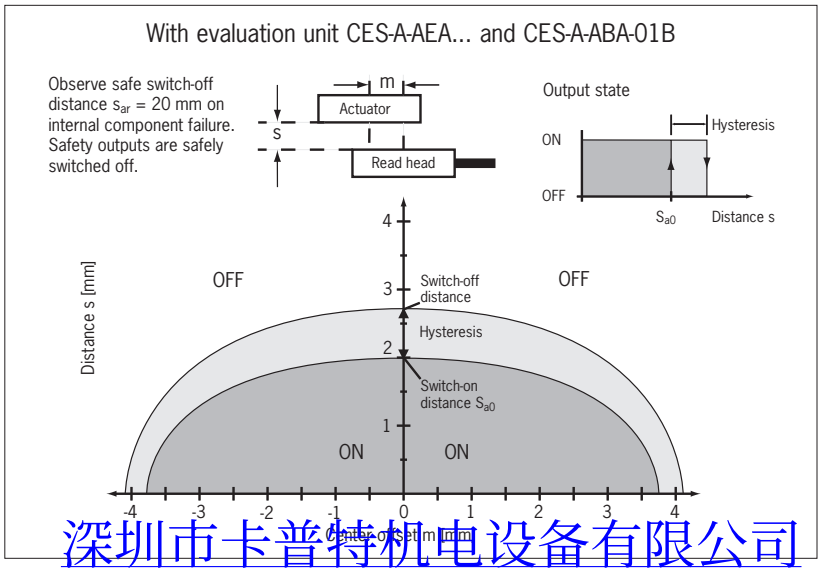

Direction of opening

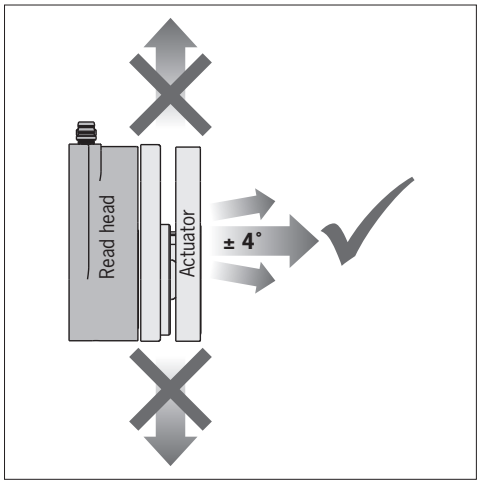

Technical data

Parameters	Value			Unit
General	min.	typ.	max.	
Housing material	Aluminum			
Material, read head CES	Plastic (PPS)			
Solenoid material	Galvanized steel			
Weight	Approx. 0.9			kg
Ambient temperature	-25	-	+50	°C
Degree of protection according to IEC 60529	IP67			
Installation position	Any			
Solenoid				
Adhesive force in axial direction	1000			N
Adhesive force due to remanence	Approx. 0.7			N
Solenoid center offset max.	± 2.5			mm
Solenoid operating voltage U_B plug S1	20.4	24	26.4	V DC
Reverse polarity protection	Yes			
Current consumption at connection S1.2 (U_B) at connection S1.1 (M_{ON})	225 15 (without external LED)			mA
Power consumption	Approx. 5.8			W
Switch-off delay	750			ms
Solenoid operating voltage connection	M8 plug connector (plug), 4-pin			
External LED indicator connection	M8 plug connector (socket), 4-pin			
Read head				
Operating distance for center offset m = 0 - Safe switch-off distance S_{ar}	-	-	20	mm
Cable length l = 0 to 25 m - Switch-on distance S_{a0} - Switching hysteresis	-	2	-	
	-	0.7	-	
Cable length l = 25 to 50 m - Switch-on distance S_{a0} - Switching hysteresis	-	1.6	-	
	-	0.6	-	
Connection evaluation unit plug S3	M8 plug connector (plug), 3-pin			
Connection cable	-	-	50	m
Connection external LED indicator plug S2				
Current consumption	-	-	500	mA

Pin assignment

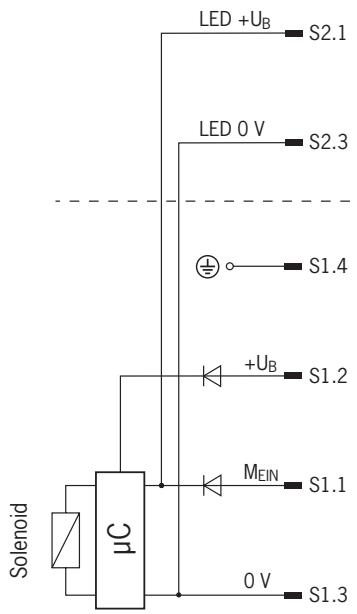

Circuit diagram connection solenoid operating voltage S1 and external LED indicator S2

External LED indicator connection		
S2.1	▸	LED +U_B
S2.2	▸	-
S2.3	▸	LED 0 V
S2.4	▸	-

S2/M8 socket

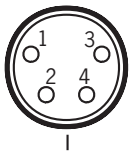

S1/M8 plug

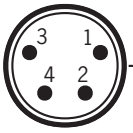

S3/M8 plug

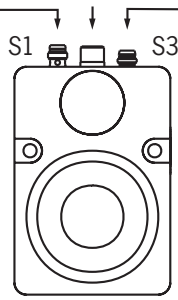

Solenoid operating voltage		
S1.1	▸	M_{ON}/ DC 24V
S1.2	▸	+U_B/ DC 24V
S1.3	▸	0 V/GND
S1.4	▸	⏚

Evaluation unit CES		
S3.1	▸	H1
S3.3	▸	H2
S3.4	▸	SH (screen)

Ordering table

Item	Adhesive force [N]	Order No.
CES-A-LH10R-SB	1000	095 793

Wiring and block diagram CEM

(connection of read head CEM-A-LD4-S2 to evaluation unit CES-A-AEA-04B)

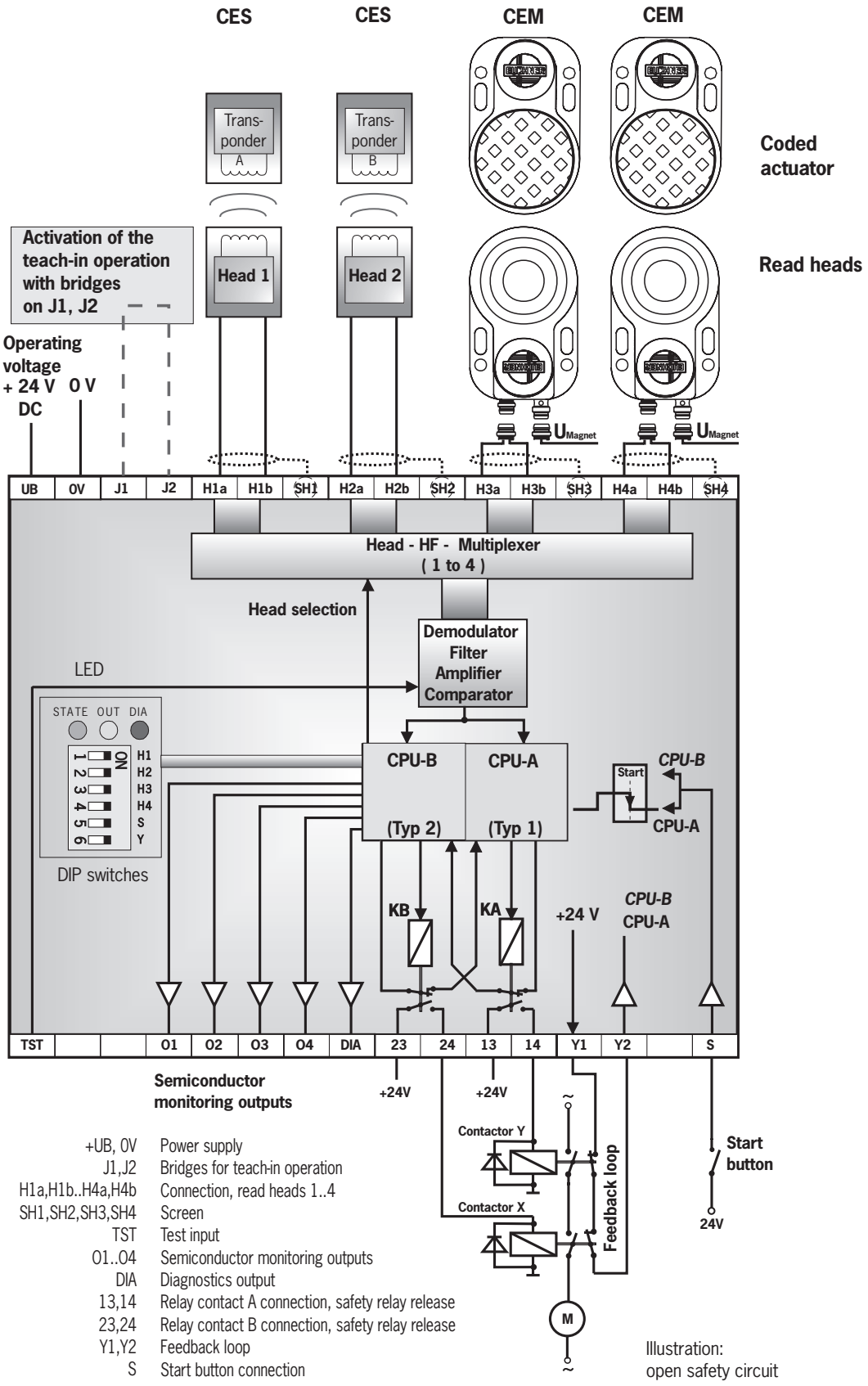

Connection variants read head CEM-A-LE05K-S2

Cable outlet, straight plug connector

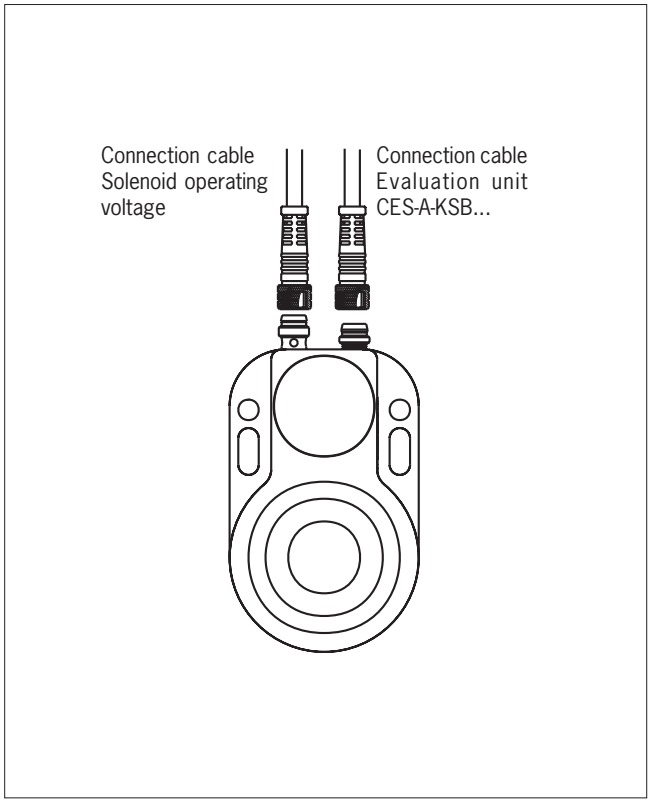

Cable outlet, angled plug connector

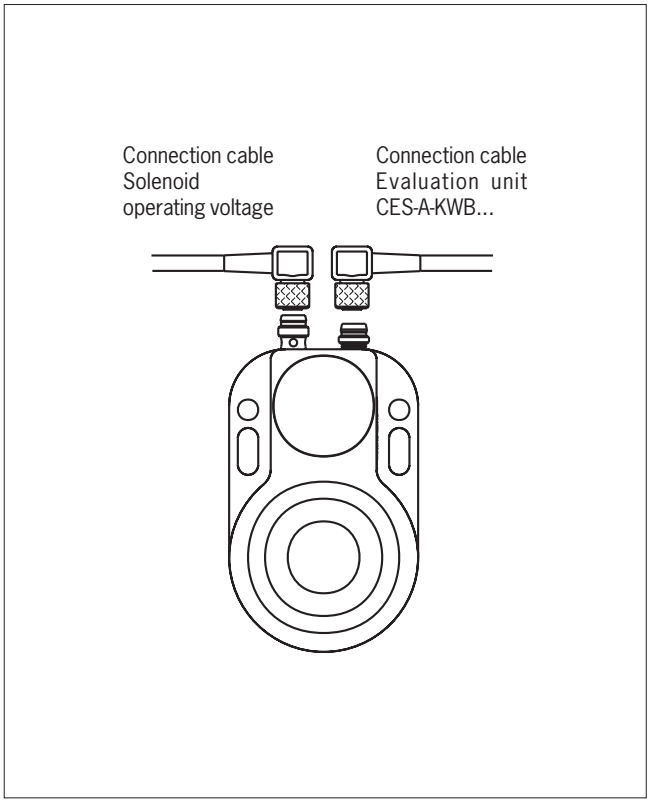

Connection variants read head CEM-A-LH10K-S3

Cable outlet, straight plug connector

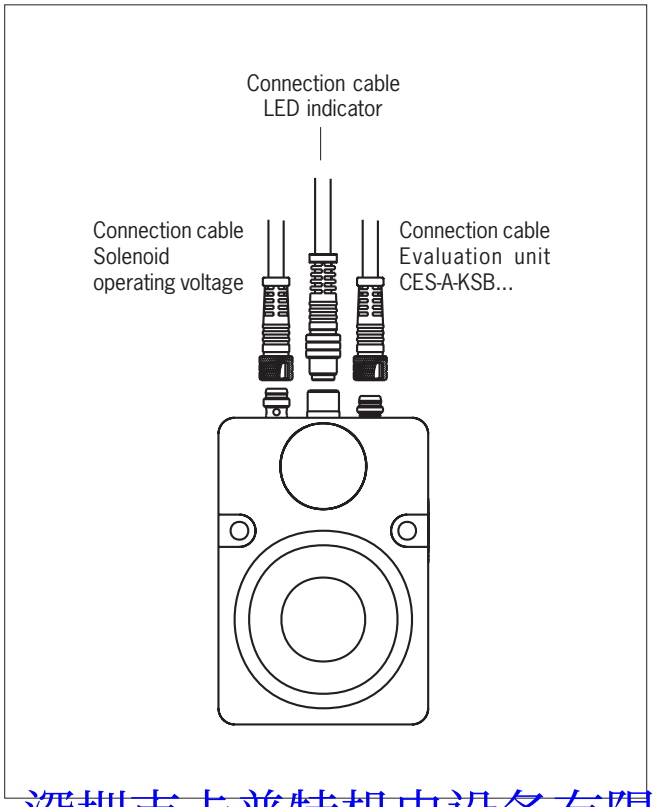

Cable outlet, angled plug connector

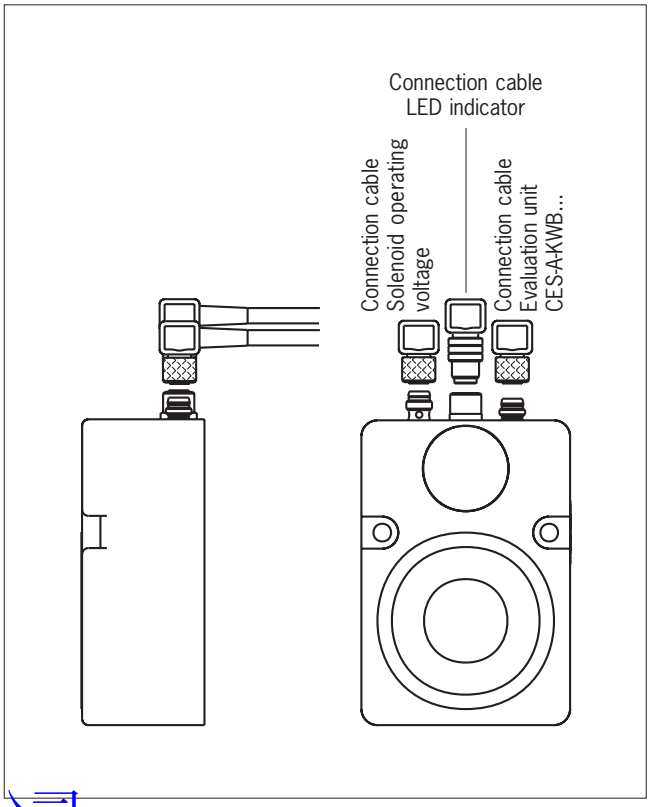

Actuator CEM-A-BE05

- **Adhesive force 500 N**
- **In combination with read head CEM-A-LE05K-S2 or CEM-A-LE05R-S2**

Dimension drawing

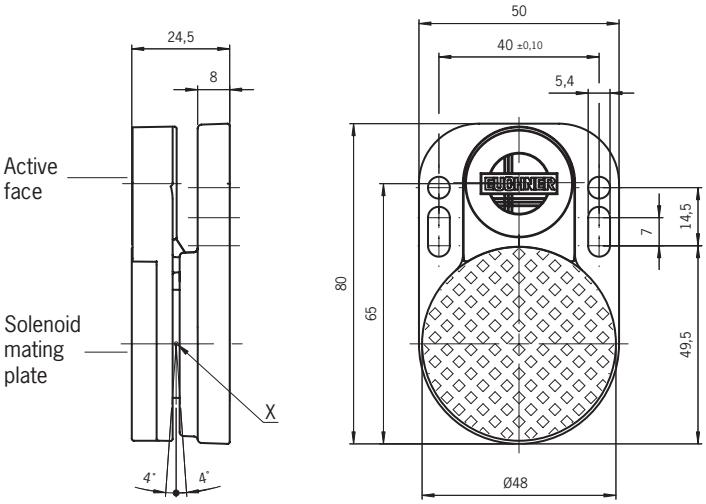

Note

- The actuators CEM... can only be used with the evaluation units given above.
- For detailed information see the operating instructions for the CES evaluation unit used.

Notes on installation

- Actuator and read head must be fitted so that:
  - They are positively connected to the safety guard, e.g. by using safety screws.
  - When the safety door is opened, the actuator is moved in the axial direction (frontal) away from the read head.

Safety precautions

- The surface of the solenoid and the mating plate may become hot.
  Protection against accidental contact or adequate heat dissipation must be provided by mounting the read head on metal.
- The safety switch CEM... with solenoid is not allowed to be used for the protection of personnel as per EN 1088.

Technical data

Parameters	Value			Unit
General	min.	typ.	max.	
Housing material	Aluminum			
Material, actuator CES	Plastic (PPS)			
Solenoid mating plate material	Galvanized steel			
Weight	Approx. 0.18			kg
Ambient temperature	-25	-	+50	°C
Degree of protection according to IEC 60529	IP67			
Installation position	Active face opposite read head			
Adjustment angle (around point X, see dimension drawing)	± 4			°

Ordering table

Item	Order No.
CEM-A-BE05	094 805

Actuator CEM-A-BH10

- **Adhesive force 1000 N**
- **In combination with read head CEM-A-LH10K-S3 or CEM-A-LH10R-S3**

Dimension drawing

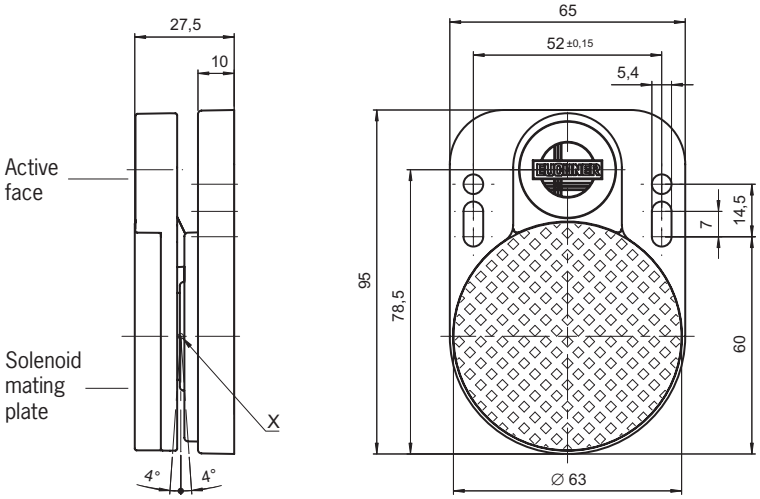

Note

- The actuators CEM... can only be used with the evaluation units given above.
- For detailed information see the operating instructions for the CES evaluation unit used.

Notes on installation

- Actuator and read head must be fitted so that:
  - They are positively connected to the safety guard, e.g. by using safety screws.
  - When the safety door is opened, the actuator is moved in the axial direction (frontal) away from the read head.

Safety precautions

- The surface of the solenoid and the mating plate may become hot.
  Protection against accidental contact or adequate heat dissipation must be provided by mounting the read head on metal.
- The safety switch CEM... with solenoid is not allowed to be used for the protection of personnel as per EN 1088.

Technical data

Parameters	Value			Unit
General	min.	typ.	max.	
Housing material	Aluminum			
Material, actuator CES	Plastic (PPS)			
Solenoid mating plate material	Galvanized steel			
Weight	Approx. 0.3			kg
Ambient temperature	-25	-	+50	°C
Degree of protection according to IEC 60529	IP67			
Installation position	Active face opposite read head			
Adjustment angle (around point X, see dimension drawing)	± 4			°

Ordering table

Item	Order No.
CEM-A-BH10	095 175

Accessories

Connection cable with M8 plug connector for solenoid operating voltage on read head CEM...

Straight plug connector

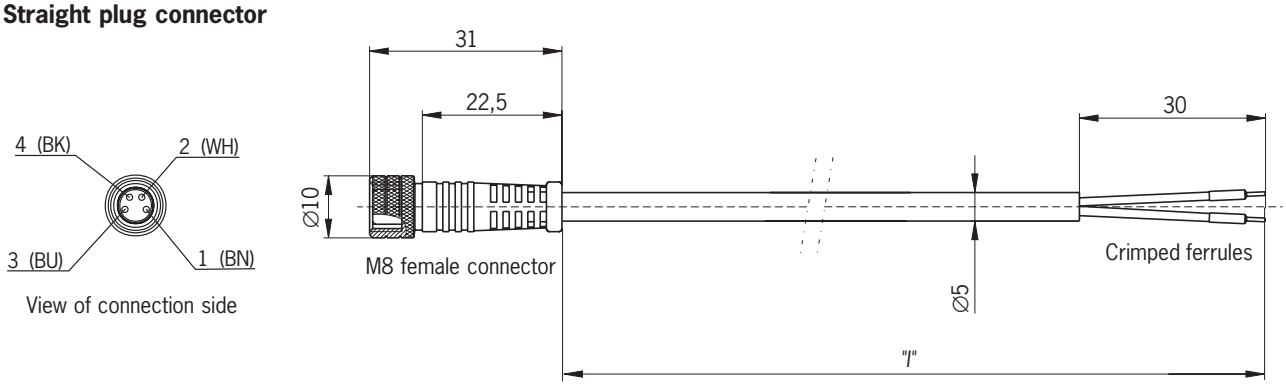

Angled plug connector

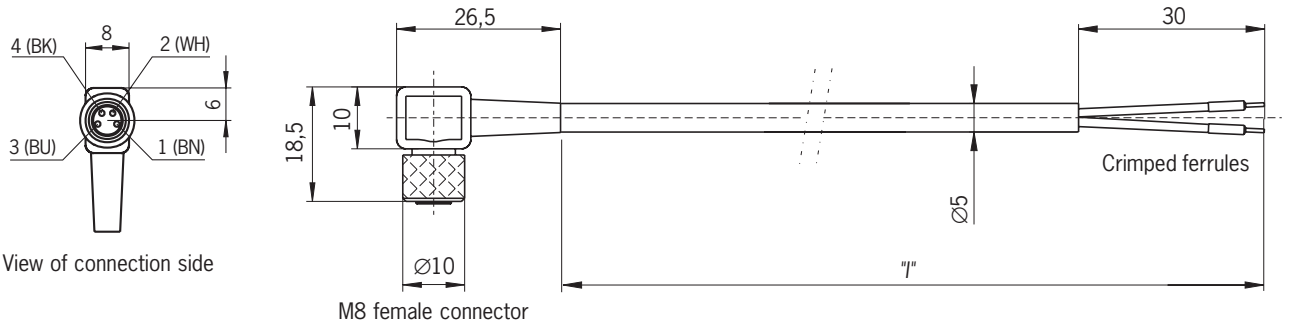

Technical data

Parameters	Value
Plug connector	4-pin M8 female connector, screw terminals Plug housing, black PUR Union nut, nickel-plated CuZn
Connection cable	4 x 0.25 mm² screened, ∅ 5.0 mm, outer sheath PVC Bending radius 70 mm min.

Ordering table

Plug connector	Cable length "l" (meters)	Cable type V=PVC	Order No.
straight	-05	V	088 813
	-10	V	088 814
	-15	V	088 815
	-25	V	095 035
angled	-10	V	084 703

Connection cable with M8 plug connector for LED indicator on read head CEM-A-LH10K-S3

Straight plug connector

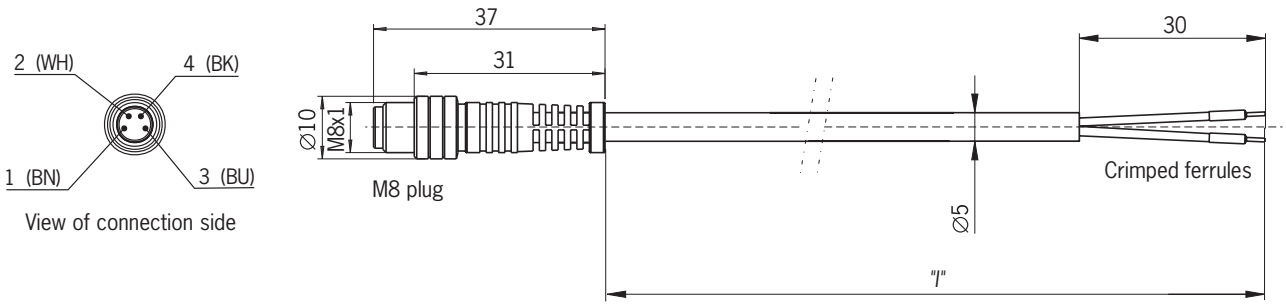

Angled plug connector

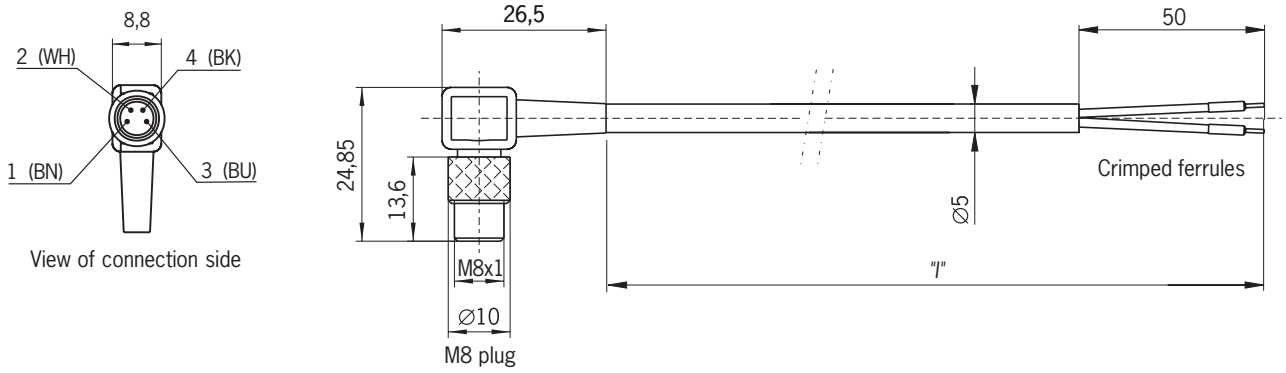

Technical data

Parameters	Value
Plug connector	4-pin M8 plug, straight, screw terminals Plug housing, black PUR Union nut, nickel-plated CuZn
Connection cable	4 x 0.25 mm² screened, ∅ 5.0 mm, outer sheath PVC Bending radius 70 mm min.

Ordering table

Plug connector	Cable length "l" (meters)	Cable type V=PVC	Order No.
straight	-02	V	088 841
	-05	V	088 842
	-10	V	088 843
	-15	V	088 844
angled	-10	V	084 705

Connection cable with M8 plug connector for read head CES-A-L... and CEM-A-L

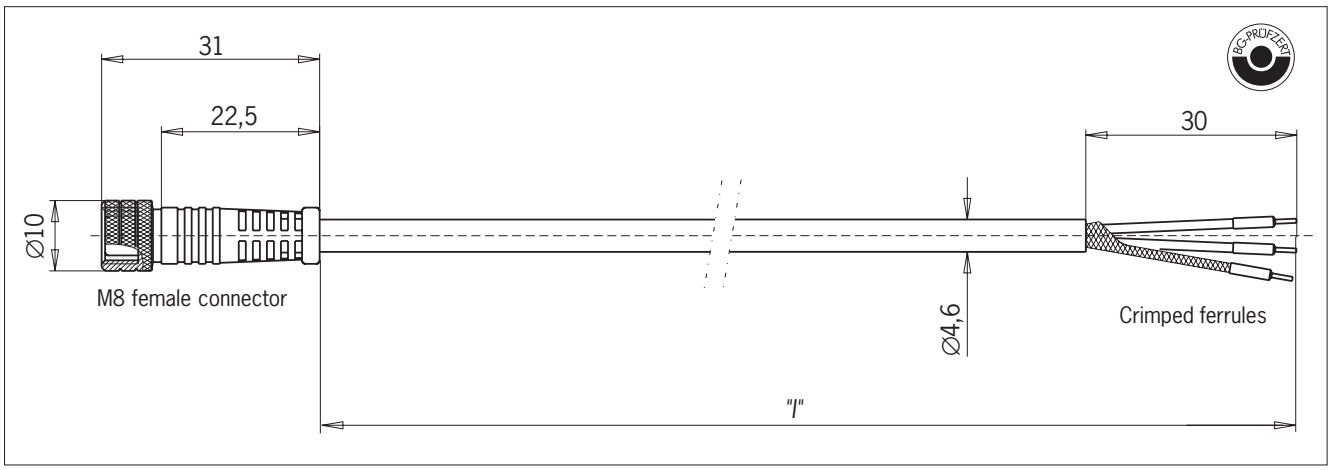

Angled plug connector

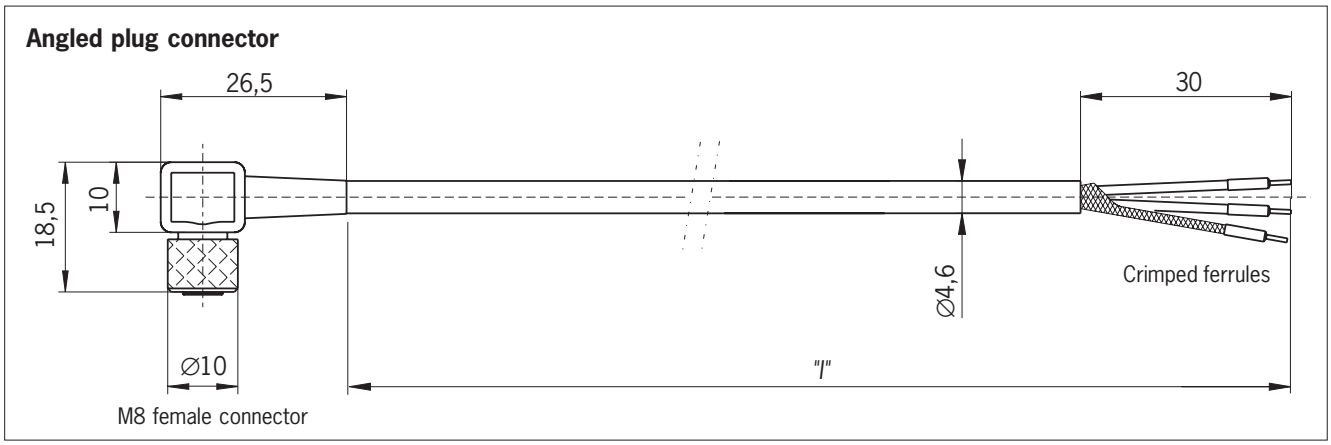

Technical data

Parameters	Value
Plug connector	3-pin M8 female connector, straight Screw terminals Knurled nut not connected to cable screen
Connection cable	2 x 0.25 mm² screened, ∅ 4.6 mm, outer sheath PVC 2 x 0.25 mm² screened, ∅ 4.8 mm, outer sheath PUR, suitable for drag chain
Cable length	max. 50 m taking into account the switching distance

Ordering table

Plug connector	Cable length "l" (meters)	Cable type V=PVC / P=PUR	Type designation	Order No.
straight	-03	V	CES-A-KSB-03V	077 935
	-05	V	CES-A-KSB-05V	077 793
	-10	V	CES-A-KSB-10V	077 767
	-20	V	CES-A-KSB-20V	077 716
	-25	V	CES-A-KSB-25V	077 717
	-50	V	CES-A-KSB-50V	077 718
	-05	P	CES-A-KSB-05P	084 762
	-10	P	CES-A-KSB-10P	084 763
	-15	P	CES-A-KSB-15P	084 764
	-20	P	CES-A-KSB-20P	084 765
	-25	P	CES-A-KSB-25P	084 766
	-50	P	CES-A-KSB-50P	084 767
angled	-10	V	CES-A-KWB-10V	084 701

Connection cable with M12 plug connector for safety switch CES-A-C5...

1	=	WH	▶	0 V
2	=	BN	▶	+ U_B
3	=	GN	▶	LA
4	=	YE	▶	LB
5	=	GY	▶	OUT
6	=	PK	▶	+LA
7	=	BU	▶	-LAB
8	=	RD	▶	+LB

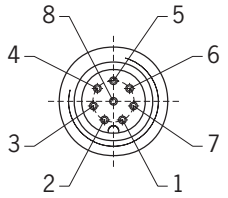

View on connection side of the 8-pin female connector

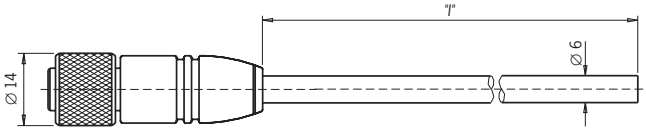

Safety switch CES-A-C5...

Voltage drop as a function of switching current and cable length (examples)

Switching current [mA]	Cable length "l" [m]	Voltage drop Output [V]	Max. voltage drop Cable [V]	Max. voltage drop Total [V]
6 (safety control system with pulsed signals)	1 - 100	1.4	0.1	1.5
	101 - 300	1.4	0.4	1.8
50 (safety relay)	1 - 15	1.5	0.2	1.7
	16 - 50	1.5	0.5	2.0
	51 - 100	1.5	1.0	2.5
	101 - 300	1.5	3.0	3.5
400 (e.g. small contactor)	1 - 15	1.7	1.2	2.9
	16 - 50	1.7	4.0	5.7
	51 - 100	1.7	8.0	9.7
	101 - 300	1.7	–	–

Technical data

Parameters	Value
Plug connector	8-pin M12 female connector, straight Screw terminals Knurled nut electrically connected to cable screen
Connection cable	8 x 0.25 mm² screened Outer sheath PVC
Cable length	Max. 300 m Taking into account the voltage drop due to the cable resistance (see table)

Ordering table

Cable length "l"	Order No.
5 m	077 751
10 m	077 752
15 m	077 753
20 m	077 871
25 m	077 872
50 m	077 873

Plug connector for safety switch CES-A-S5...

Item	Order No.
Plug connector for safety switch CES-A-S5...	096 490

Plug connector for read head CES-A-L...

Using EUCHNER couplings / plug connectors, the user can cut the read head cable to size on site at any point and connect the couplings / plug connectors.

Note
The connection cable for the read head can only be extended using these self-assembly couplings / plug connectors under the following conditions:
- ▶ The total maximum cable length is 50 m, taking into account the switch-on distance.
- ▶ The cable specified by EUCHNER must be used for the extension (screened, conductor cross-section 2 x 0.25 mm²).
- ▶ The plug connector housing must be electrically isolated from the machine ground.

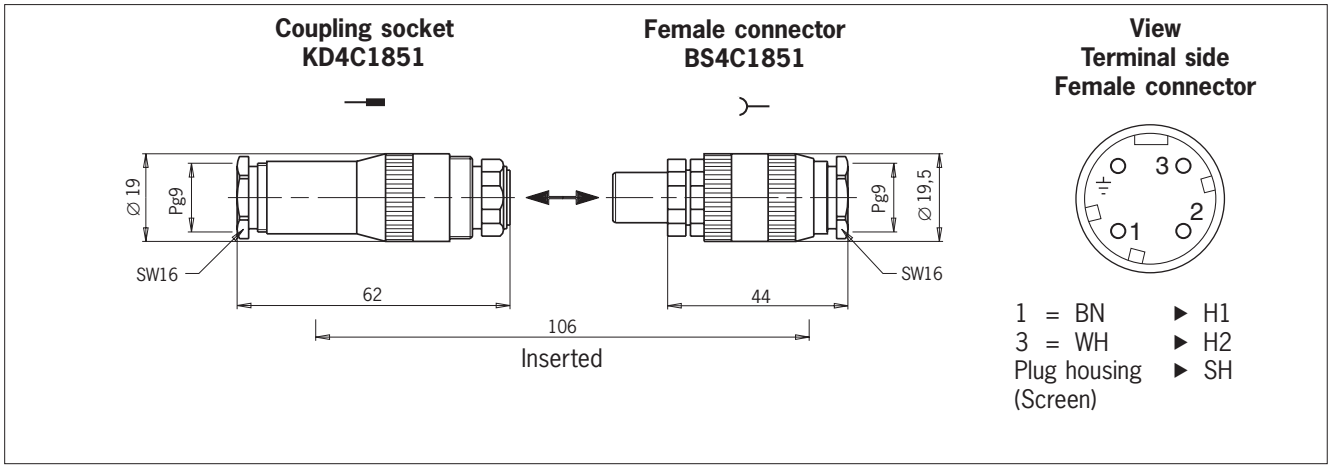

Technical data

Parameters	Value
Housing material	CuZn, matt chromium-plated
Degree of protection according to EN 60529 (inserted)	IP 65

Ordering table

Item	Order No.
Flange socket KD4C1851	077 434
Female connector BS4C1851	077 435

Safety screws

Screw type	Use	Packaging unit	Type	Order No.
M4x14	for read head CES-A-L... for read head CES-A-B... for actuator CES-A-BBA	20 pieces	M4x14-CES/V20	071 863

Insertion tool for actuator CES-A-BMB

With the aid of the insertion tool, the actuator CES-A-BMB (cylindrical design) can be screwed into a prepared M12 x 0.75 thread in safety doors.

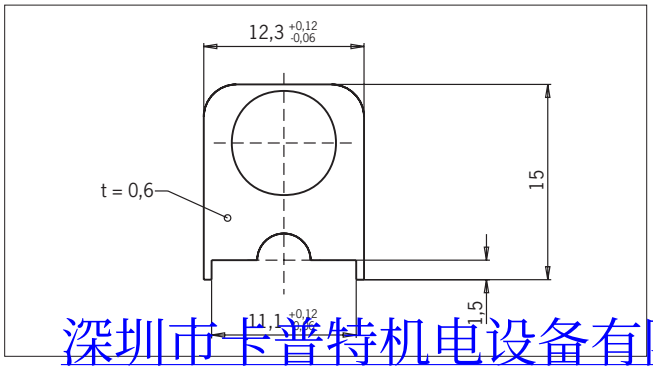

Ordering table

Item	Order No.
Insertion tool for actuator CES-A-BMB	037 662

Appendix

- Definition of terms
- Index

Definition of terms

Door monitoring output
The door monitoring output is not a safety-related output; it may not be connected to the safety circuit. The door monitoring output is generally connected to a higher-level control system to indicate the position of the doors (open/closed) on a visual display.

Dwell time
The dwell time is the time that the actuator must be inside or outside the operating distance.

Fault detection time
The fault detection time is the time for the detection of an internal fault in the device. At least one of the relay outputs is opened safely. The welding of one of the relay contacts is only detected after the safety guard is opened.

PDF
Proximity device with defined behavior under fault conditions (see EN 60 947-5-3).

PDF-M
PDF proximity devices with automatic control that do not lose their defined behavior in spite of several faults (see EN 60 947-5-3).

PDF-S
PDF proximity devices that do not lose their defined behavior in spite of a single fault (see EN 60947 5 3).

Safety class III
Equipment of safety class III is equipment on which protection against electric shock is based on safety extra-low voltage and is equipment in which no voltages higher than the safety extra-low voltage are produced.

Safety extra-low voltage
Voltage of a magnitude that does not pose an immediate risk to people. It provides safe electrical isolation from higher voltage power circuits and is used isolated from ground.

Safety output
The safety output is a safety-related output that may be connected to the safety circuit. A safety output can be switched via relay contacts or semiconductor elements.

S_{ar}
Assured switch-off distance S_{ar}
Distance from the active face within which the correct detection of the absence of a defined object is achieved under all defined environmental conditions, manufacturer's tolerances and internal component faults.

S_{a0}
Assured switch-on distance S_{a0}
Distance from the active face within which the correct detection of the presence of a defined object is achieved under all defined environmental conditions and manufacturer's tolerances.

Switching delay from state change
Corresponds to the risk time according to EN 60947-5-3. This is the maximum switch-off delay for the safety outputs following removal of the actuator.

Index sorted by article

Index sorted by catalog number

Representation international

Australia
Micromax Pty. Ltd.
PO Box 1238
Wollongong NSW 2500
Tel. +61-(0)2-4271-1300
Fax +61-(0)2-4271-8091
micromax@micromax.com.au

Austria
EUCHNER Ges.mbH
Süddruckgasse 4
2512 Tribuswinkel
Tel. +43-(0)2252-421-91
Fax +43-(0)2252-452-25
info@euchner.at

Benelux
EUCHNER (BENELUX) BV
Postbus 119
3350 AC Papendrecht
Tel. +31-(0)78-6154-766
Fax +31-(0)78-6154-311
info@euchner.nl

Brazil
EUCHNER Ltda
Av. Prof. Luiz Ignácio Anhaia Mello,
no. 4387
S. Lucas
São Paulo - SP - Brasil
CEP 03295-000
Tel. +55-11-6918-2200
Fax +55-11-6101-0613
euchner@euchner.com.br

Canada
IAC & Associates Inc.
1925 Provincial Road
Windsor, Ontario
N8W 5V7
Tel. +01-519-966-3444
Fax +01-519-966-6160
sales@iacnassociates.com

China
EUCHNER Electric (Shanghai) Ltd.
No. 8 High Technology Zone
No. 503 Meinengda Road
Songjiang, Shanghai, 201613
Tel. +86-(0)21-5774-7090
Fax +86-(0)21-5774-7599
info@euchner.com.cn

KNOWHOW I&C Co.
C-2204 Webok Time Center
No. 17 Zhongguancun Nandajie
Beijing, 100081
Tel. +86-(0)10-8857-8899
Fax +86-(0)10-8857-8844
info@knowhow.cn

Czech Republic
AMTEK s.r.o.
Videňská 125
619 00 Brno
Tel. +420-547-125-570
Fax +420-547-125-556
amtek@amtek.cz

Denmark
Robotek El & Teknik A/S
Blokken 31
3460 Birkerød
Tel. +45-4484-7360
Fax +45-4484-4177
info@robotek.dk

Eastern Europe
Hera Elektrotechnische Produkte
Handels Ges.mbH
Hauptstraße 61
2391 Kaltenleutgeben
Tel. +43-(0)2238-77518
Fax +43-(0)2238-77528
hera_gesmbh@chello.at

Finland
Sähkölehto Oy
Holkkitie 14
00880 Helsinki
Tel. +358-(0)9-774-6420
Fax +358-(0)9-759-1071
office@sahkolehto.fi

France
EUCHNER France S.A.R.L.
Parc d'Affaires des Bellevues
Rue Rosa Luxembourg
Bâtiment le Colorado
95610 ERAGNY sur OISE
Tel. +33-(0)1-3909-9090
Fax +33-(0)1-3909-9099
info@euchner.fr

Hong Kong
Imperial Engineers & Equipment Co. Ltd.
Unit B 12/F Cheung Lee Industrial Building
9 Cheung Lee Street Chai Wan
Hong Kong
Tel. +852-2889-0292
Fax +852-2889-1814
info@imperial-elec.com

Hungary
EUCHNER Ges.mbH
Magyarországi Fióktelep
2045 Törökbálint
Tópark utca 1/a.
Tel. +36-2342-8374
Fax +36-2342-8375
info@euchner.hu

India
TEKNIC CONTROLGEAR PVT. LTD.
703, Madhava,
Bandra Kurla Complex
Bandra (East)
Mumbai 400051
Tel. +91-(0)22-2659-2392
Fax +91-(0)22-2659-2391
teknic@vsnl.com

Iran
INFOCELL IRAN CO.
84, Manoucheri Ave.
P.O. Box 81655-861
Isfahan
Tel. +98-(0)311-2211-358
Fax +98-(0)311-222-6176
info@infocell-co.com

Italy
TRITECNICA S.r.l.
Viale Lazio 26
20135 Milano
Tel. +39-02-5419-41
Fax +39-02-5501-0474
info@tritecnica.it

Japan
Solton Co. Ltd.
2-13-7, Shin-Yokohama
Kohoku-ku, Yokohama
Japan 222-0033
Tel. +81-(0)45-471-7711
Fax +81-(0)45-471-7717
sales@solton.co.jp

Korea
EUCHNER Korea Co., Ltd.
RM 810 Daerung Technotown 3rd
#448 Gasang-Dong
Kumchon-Gu, Seoul
Tel. +82-(02)-2107-3500
Fax +82-(02)-2107-3999
sijang@euchner.co.kr

Mexico
SEPIA S.A. de C.V.
Maricopa # 10
302, Col. Napoles.
Del. Benito Juarez
03810 Mexico D.F.
Tel. +52-55-5536-7787
Fax +52-55-5682-2347
sepia@prodigy.net.mx

New Zealand
W Arthur Fisher Limited
11 Te Apunga Place
Mt Wellington
Auckland
Tel. +64-(0)9270-0100
Fax +64-(0)9270-0900
chrisl@waf.co.nz

Norway
ELIS ELEKTRO AS
Jerikoveien 16
1067 Oslo
Tel. +47-22-9056-70
Fax +47-22-9056-71
post@eliselektro.no

Poland
ELTRON
Pl. Wolności 7B
50-071 Wroclaw
Tel. +48-(0)71-3439-755
Fax +48-(0)71-3460-225
eltron@eltron.pl

Portugal
PAM Serviços Tecnicos Industriais Lda.
Rua de Timor - Pavilhão 2A
Zona Industrial da Abelheira
4785-123 TROFA
Tel. +351-252-418431
Fax +351-252-494739
pam@mail.telepac.pt

Singapore
Sentronics Automation & Marketing Pte Ltd.
Blk 3, Ang Mo Kio Industrial Park 2A
#05-06
Singapore 568050
Tel. +65-6744-8018
Fax +65-6744-1929
sentronics@pacific.net.sg

Slovenia
SMM d.o.o.
Jaskova 18
2000 Maribor
Tel. +386-(0)2450-2326
Fax +386-(0)2462-5160
franc.kit@smm.si

Spain
EUCHNER, S.L.U.
Gurutzegi 12 - Local 1
Poligono Belartza
20018 San Sebastian
Tel. +34-943-316-760
Fax +34-943-316-405
euchner@edunet.es

Sweden
Censit AB
Box 331
33123 Värnamo
Tel. +46-(0)370-6910-10
Fax +46-(0)370-1888-8
info@censit.se

Switzerland
EUCHNER AG
Grofstraße 17
8887 Mels
Tel. +41-(0)81-720-4590
Fax +41-(0)81-720-4599
euchner.schweiz@bluewin.ch

Taiwan
Daybreak Int'l (Taiwan) Corp.
3F, No. 124, Chung-Cheng Road
Shihlin 11145, Taipei
Tel. +886-(0)2-8866-1234
Fax +886-(0)2-8866-1239
day111@ms23.hinet.net

Thailand
Aero Automation Co., Ltd.
600/441 Moo 14 Phaholyothin Rd.
Kukot, Lamlukka
Patumthanee 12130
Tel. +66-(0)2-536-7660-1
Fax +66-(0)2-536-7877
aeroautomation@yahoo.co.th

Turkey
ARI Endustri Urunleri SAN. Ve Tic.Ltd.Sti.
Perpa Ticaret Merkezi
A Blok Kat 11 No:1406
34384 Okmeydani/Sisli Istanbul
Tel. +90-(0)212-3204-334
Fax +90-(0)212-210-0201
euchner@ariendustri.com.tr

United Kingdom
EUCHNER (UK) Ltd.
Unit 2 Petre Drive,
Sheffield
South Yorkshire
S4 7PZ
Tel. +44-(0)114-256-0123
Fax +44-(0)114-242-5333
info@euchner.co.uk

USA
EUCHNER USA Inc.
6723 Lyons Street
East Syracuse, NY 10357
Tel. +01-315-7010-315
Fax +01-315-7010-319
info@euchner-usa.com

Head office

EUCHNER GmbH + Co. KG
Kohlhammerstraße 16
70771 Leinfelden-Echterdingen
Germany
Tel. +49-(0)711-7597-0
Fax +49-(0)711-753316
info@euchner.de
www.euchner.de

Automation

Safety

ManMachine

More than safety.