米朗 MIRAN®

中国工信部高精度传感器一条龙应用计划示范项目

国家级专精特新“小巨人”企业，国家级高新技术企业

中国工业强基重点产品，中国工信部传感器一条龙应用计划示范企业

角度位置传感器

Angular position sensors

















角度（单圈/多圈）位置传感器

ANGULAR (SINGLE-TURN/MULTI-TURN) POSITION SENSORS

- Demonstration project of one-stop application plan for high-precision sensors of Ministry of Industry and Information Technology of China
- National level specialized and special new "little giant" enterprise, national level high-tech enterprise
- Key products of strong industrial base in China, demonstration enterprise of sensor one-stop application plan of Ministry of Industry and Information Technology of China

目录
CATALOGS

一、电位器原理 03
Potentiometer Principle

1. P2500/4500/6500系列单圈角度传感器 04
P2500/4500/6500 Series Monocyclic Sensors

2. WDD35D4/WDD51D4系列单圈角度传感器 07
WDD35D4/WDD51D4 Series Monocyclic Sensors

3. WDA-D22-A/B/C/WDA-D40-P系列单圈角度传感器 09
WDA-D22-A/B/C/WDA-D40-P Series Monocyclic Sensors

4. WKA系列单圈中空轴角度传感器 12
WKA Series Monocyclic Hollow Shaft Openness Sensors

5. MZK系列单圈中空轴角度传感器 15
MZK Series Monocyclic Hollow Shaft Openness Sensors

二、磁感应原理 19
Principle Of Magnetic Induction

1. WOA-B/WOA-B1/WOA-B2/WOA-C1/WOA-C2系列单圈角度传感器 22
WOA-B/WOA-B1/WOA-B2/WOA-C1/WOA-C2 Series Monoclinic Sensor

2. WOA-C22/WOA-C27/WOA-C37/WOA-C44系列微型单圈角度传感器 30
WOA-C22/WOA-C27/WOA-C37/WOA-C44 Series Miniature Monocyclic Open-End Sensors

3. PX4500/PX6500微型单圈角度传感器 35
PX4500/PX6500 Miniature Monoclinic Sensors

4. WOA-A系列多圈角度传感器 39
WOA-A Series Multi-circle Openness Sensor

5. WOA-R系列多圈角度传感器 42
WOA-R Series Multi-circle Openness Sensor

6. WOA-D系列防水型多圈角度传感器 45
WOA-D Series Watertight Multiturn Sensors

7. WOA-D2系列双输出型多圈角度传感器 48
WOA-D2 Series Dual Output Multi-circle Sensor

8. MFB-MPSFS2系列防水防爆型多圈角度传感器 51
MFB-MPSFS2 Series Watertight Explosion-proof Multi-circle Sensors

三、防爆合格证 54
Explosion-proof Certificate

四、应用领域 55
Areas Of Application

电位器原理Potentiometer Principle

电位计原理角度传感器是由电阻体、接线端子、旋转轴、转接板和法兰等组成。根据电阻值的变化来测量旋转位置。可以将旋转电位计想象成一条电阻线圈，在其上分布着若干个电阻值，这些电阻值与旋转角度呈线性关系。当旋转电位计绕着中心转动时，旋转轴上的铜质刷子（又称“刮子”）会与这些电阻值相接触，从而将旋转位置控制转换为电压信号输出。这个信号随着旋转实时变动，可以用来控制电路的行为或反馈位置信息。

Potentiometer principle angle sensors are composed of a resistor body, terminals, rotating shaft, adapter plate and flange. The rotational position is measured according to the change in resistance values. The rotary potentiometer can be visualized as a resistive coil with a number of resistance values distributed across it, which are linearly related to the angle of rotation. When the rotary potentiometer rotates around the center, the copper brushes (also known as "wipers") on the rotating shaft will come into contact with these resistive values, thus converting the rotational position control into a voltage signal output. This signal varies in real time with rotation and can be used to control the behavior of a circuit or to provide feedback on position.

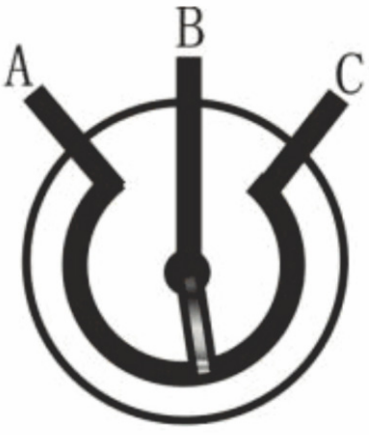

原理示意图
schematic diagram

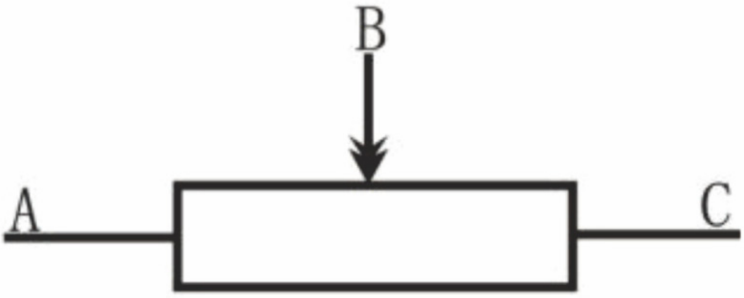

电位器的符号
potentiometer symbols

P2500/4500/6500系列单圈角度传感器
P2500/4500/6500 Series Monocyclic Sensors

产品实物图Product Picture

P2500/P4500/P6500（尺寸不同different sizes）





产品概述Product Overview

P2500/P4500/P6500角度位移传感器机壳为阳极氧化铝机壳和耐高温塑料封盖，电阻材质为导电塑料，采用不锈钢轴及不锈钢球轴承，滑刷组件为贵金属多触点滑刷，电器连接为镀金黄铜端子。该系列角度位移传感器全金属机壳，球形轴承，导电塑料基板和弹性阻尼滑刷使得测量换向自如，P2500/P4500/P6500角度位移传感器由于其可靠性高，寿命长，线性优异，分辨率高，可高转速运动和耐腐导电材质，使传统的电位计原理传感器技术达到现代应用水平。厂家可提供特殊行程和转轴尺寸等特殊规格的定制。

P2500/P4500/P6500 angular displacement sensor housing for anodized aluminum housing and high temperature plastic cover, resistor material for conductive plastic, stainless steel shaft and stainless steel ball bearings, brush assembly for the precious metal multi-contact brush, electrical connections for the gold-plated brass terminals. The series of angular displacement sensor all-metal housing, ball bearings, conductive plastic substrate and elastic damping slide brush makes the measurement of free direction, P2500/P4500/P6500 angular displacement sensor due to its high reliability, long life, excellent linearity, high resolution, can be a high speed movement and corrosion-resistant conductive materials, so that the traditional potentiometer principle of sensor technology to achieve the level of modern applications. Manufacturers can provide special travel and spindle size and other special specifications of customization.

产品尺寸图Product Dimension Drawing

P2500

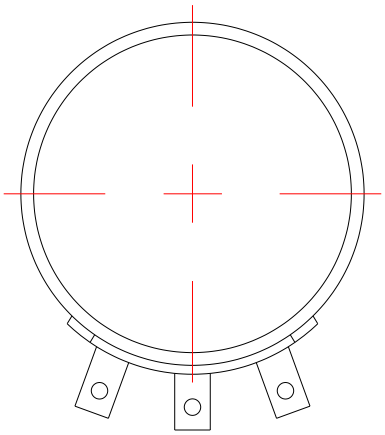



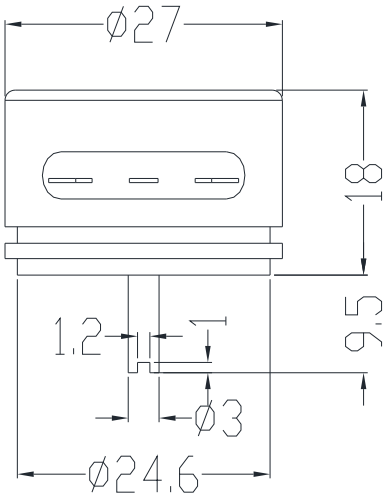

P4500

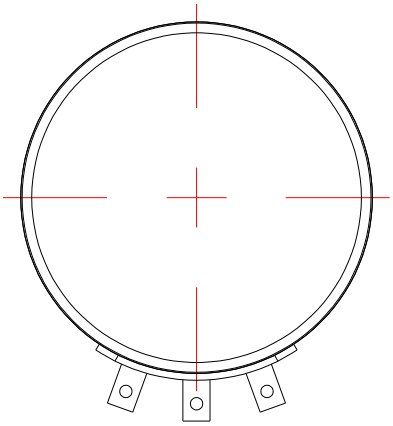



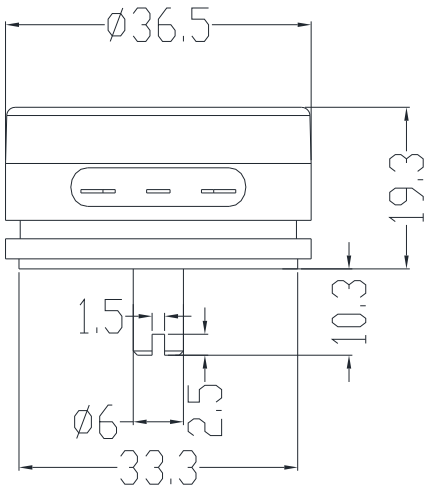

P6500

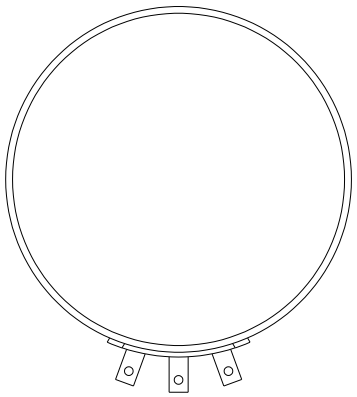



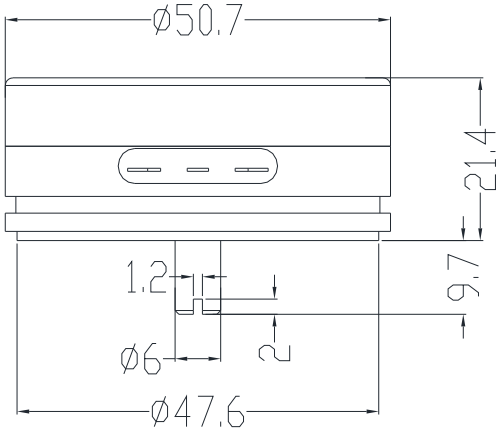

性能参数Performance Parameters

电气指标Electrical indicators

型号 Model number	P2500/P4500/P6500角度位移传感器 P2500/P4500/P6500 Angular Displacement Sensor		
有效行程 Valid itinerary	0-355°	温度漂移 Temperature drift	9ppm/°C
阻值范围 Resistance range	5000Ω	工作温度 Operating temperature	-40°C~+100°C
线性精度 Linear accuracy	±0.1%FS	工作速度 Working speed	3000rpm
输出信号 Output signal	分压器 voltage divider	防护等级 Protection class	IP57
使用寿命 Service life	100x10^{6}次 100x106 times		
备注 Note	高精度，应用于测量、控制领域及仪表配套 high precision, used in the field of measurement, control and instrumentation supporting		

性能指标Performance indicators

型号 Model number	P2500	外形尺寸 Overall dimensions	Φ27mm
重复精度 Repeatability	0.01°	输出轴 Output shaft	Φ3mm

型号 Model number	P4500	外形尺寸 Overall dimensions	Φ36.5mm
重复精度 Repeatability	0.007°	输出轴 Output shaft	Φ6mm

型号 Model number	P6500	外形尺寸 Overall dimensions	Φ50.8mm
重复精度 Repeatability	0.007°	输出轴 Output shaft	Φ6mm

WDD35D4/WDD51D4系列单圈角度传感器
WDD35D4/WDD51D4 Series Monocyclic Sensors

产品实物图Product Picture

WDD35D4







WDD51D4





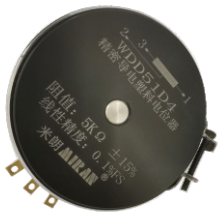

产品概述Product Overview

WDD35D4/WDD51D4角度位移传感器机壳为阳极氧化铝机壳和耐高温塑料封盖，电阻材质为导电塑料，采用不锈钢轴及不锈钢球轴承，滑刷组件为贵金属多触点滑刷，电器连接为镀金黄铜端子。WDD35D4/WDD51D4角度位移传感器为全金属机壳，球形轴承和导电塑料换向自如，WDD35D4/WDD51D4角度位移传感器作为一种高精密角度位移传感器，它既适合各种模拟量输出的应用，又能兼具数字信号输出应用，比如，如果它同时和A/D变换器配合使用，则构成性价比极高的数字型绝对值编码器，可用于精确定位，位置监测等。厂家可提供特殊行程和转轴尺寸等特殊规格的定制。

WDD35D4/WDD51D4 angular displacement sensor housing for anodized aluminum housing and high temperature plastic cover, resistor material for conductive plastic, stainless steel shaft and stainless steel ball bearings, slide brush assembly for the precious metal multi-contact sliding brush, electrical connection for the gold-plated brass terminals.WDD35D4/WDD51D4 angular displacement sensor for the all-metal chassis, spherical bearings and conductive plastic Commutation freely, WDD35D4/WDD51D4 angle displacement sensor as a kind of high-precision angle displacement sensor, it is suitable for a variety of analog output applications, but also can be both digital signal output applications, for example, if it is used at the same time and the A/D converter with the use of the digital digital absolute encoder constitutes a cost-effective, can be used for precise positioning, position monitoring and so on. Customized specifications such as special travel and shaft sizes are available.

性能参数Performance Parameters

电气指标Electrical indicators

型号 Model number	WDD35D4/WDD51D4角度位移传感器 WDD35D4/WDD51D4 Angular Displacement Sensor		
有效行程 Valid itinerary	0-355°	温度漂移 Temperature drift	9ppm/°C
阻值范围 Resistance range	5000Ω	工作温度 Operating temperature	-40°C~+100°C
线性精度 Linear accuracy	±0.1%FS	工作速度 Working speed	3000rpm
输出信号 Output signal	分压器 voltage divider	防护等级 Protection class	IP57
使用寿命 Service life	100x10⁶次 100x106 times	输出轴 Output shaft	Φ6mm
重复精度 Repeatability	0.01°	外形尺寸 Overall dimensions	WDD35D4:Φ38.5mm WDD51D4:Φ50.8mm
备注 Note	高精度,应用于测量、控制领域及仪表配套 high precision, used in the field of measurement, control and instrumentation supporting		

产品尺寸图Product Dimension Drawing

WDD35D4

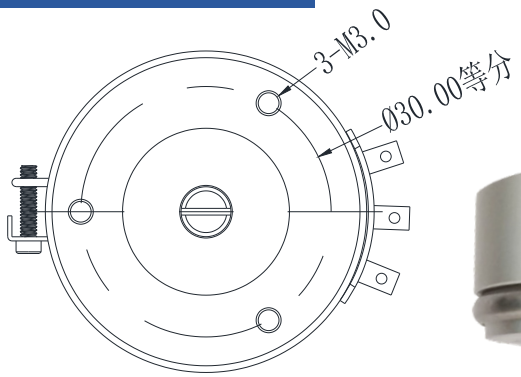



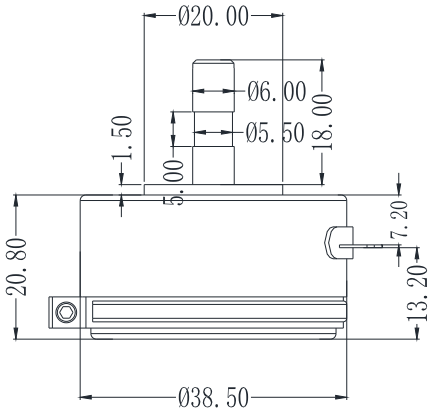

WDD51D4

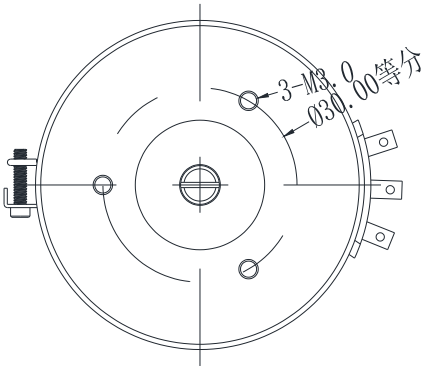



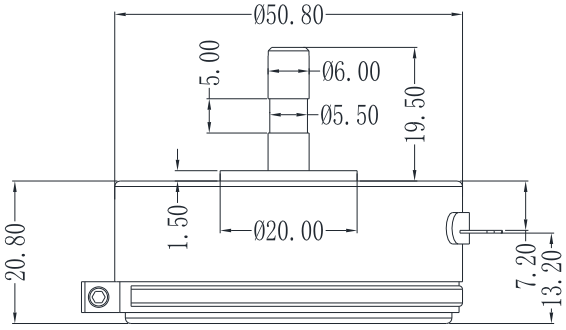

WDA-D22-A/B/C/WDA-D40-P系列单圈角度传感器
WDA-D22-A/B/C/WDA-D40-P Series Monocyclic Sensors

产品实物图Product Picture

WDA-D22-A 可多圈连续旋转Multi-turn continuous rotation





WDA-D22-B 可多圈连续旋转Multi-turn continuous rotation





WDA-D22-C 可多圈连续旋转Multi-turn continuous rotation





WDA-D40-P 有角度机械限位，只能单圈200度以内往复旋转Angular mechanical limit, can only be a single circle within 200 degrees of reciprocating rotation




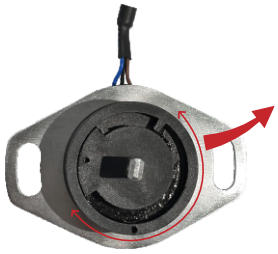

可旋转角度200°，
不可多圈旋转
Rotatable angle: 200°
Cannot rotate in
multiple circles

产品概述Product Overview

WDA-D22-A/WDA-D40-P角度位移传感器机壳为耐高温塑料封盖，WDA-D22-B/WDA-D22-C角度位移传感器机壳为阳极氧化铝；电阻材质为导电塑料，采用不锈钢轴及不锈钢球轴承，滑刷组件为贵金属触点滑刷，电器连接为镀金黄铜端子。该系列角度位移传感器球形轴承和导电塑料换向自如，该系列角度位移传感器作为一种高精密角度位移传感器，它既适合各种模拟量输出的应用，又能兼具数字信号输出应用，比如，如果它同时和A/D变换器配合使用，则构成性价比极高的数字型绝对值编码器，可用于精确定位，位置监测等。厂家可提供特殊行程和转轴尺寸等特殊规格的定制。

WDA-D22-A / WDA-D40-P angular displacement sensor housing for high temperature plastic cover, WDA-D22-B / WDA-D22-C angular displacement sensor housing for anodized aluminum; resistor material for the conductive plastic, stainless steel shaft and stainless steel ball bearings, slide brush assembly for the precious metal multi-contact sliding brush, electrical connections for the gold-plated brass terminals. The series of angular displacement sensor ball bearings and conductive plastic commutation freely, the series of angular displacement sensor as a high-precision angular displacement sensor, it is suitable for a variety of analog output applications, but also both digital signal output applications, for example, if it is also used in conjunction with the A/D converter, constitutes a very cost-effective digital absolute encoder can be used for precise positioning, position monitoring and so on. Customized specifications such as special travel and shaft sizes are available.

性能参数Performance Parameters

电气指标Electrical indicators

线性精度 Linear accuracy	±0.3%FS	重复精度 Repeatability	0.007°
输出信号 Output signal	分压器 voltage divider	输出轴 Output shaft	Φ6mm
工作温度 Operating temperature	-40°C~+100°C	工作速度 Working speed	600rpm
温度漂移 Temperature drift	9ppm/°C	防护等级 Protection class	IP57
使用寿命 Service life	100x10^{6}次 100x106 times		
有效行程 Valid itinerary	WDA-D22-A/WDA-D22-B:0-300°; WDA-D22-C:0-342°; WDA-D40-P:0-200°		
阻值范围 Resistance range	WDA-D22-A/WDA-D22-B/WDA-D22-C:5KΩ/10KΩ;WDA-D40-P:5KΩ		
外形尺寸 Overall dimensions	WDA-D22-A/WDA-D22-C:Φ22mm;WDA-D22-B:Φ23mm;WDA-D40-P:Φ41mm		

产品尺寸图Product Dimension Drawing

WDA-D22-A

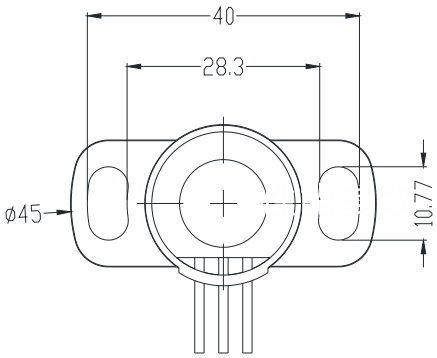



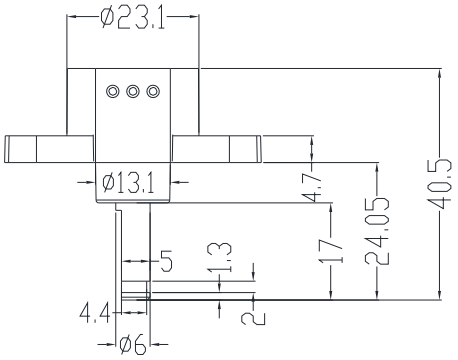

WDA-D22-B

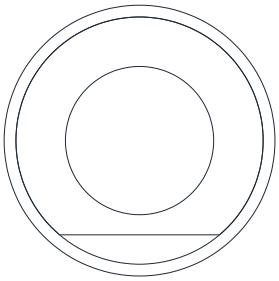



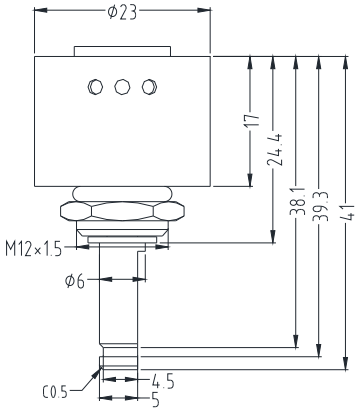

WDA-D22-C

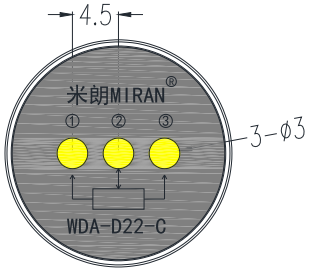



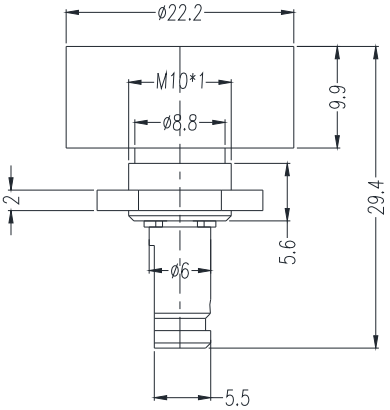

WDA-D40-P

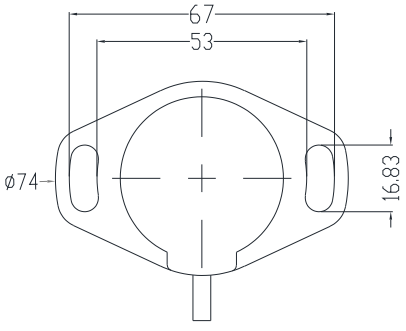



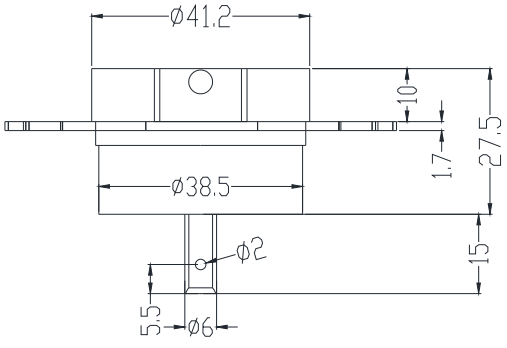

WKA系列单圈中空轴角度传感器
WKA Series Monocyclic Hollow Shaft Openness Sensors

产品实物图Product Picture







产品概述Product Overview

中空轴角度传感器（电位器）分为WKA-D39-A和WKA-D22-B两款。产品机壳为耐高温塑料封盖，电阻材质为导电塑料，滑刷组件为贵金属多触点滑刷，电器连接为镀金黄铜端子。该产品使用寿命长，线性优异，分辨率高，且运行速度高，材质精良。

中空轴角度传感器(电位器)的显著特点:作为一种高精密角度位移传感器,既合适各种模拟量输出的应用,又能兼具数字信号输出应用。中空轴角度传感器(电位器)适用于测量、准确定位,位置检测等。

Hollow shaft angle sensors (potentiometers) are available in two models, WKA-D39-A and WKA-D22-B. Product casing is high temperature resistant plastic cover,the resistor material is conductive plastic, the slide brush assembly is precious metal multi-contact slide brush, and the electrical connection is gold-plated brass terminal. The product has a long service life, excellent linearity, high resolution, high operating speed, and is made of high quality materials.

Hollow shaft angle sensor (potentiometer) significant features: as a high-precision angle displacement sensor, both suitable for a variety of analog output applications, but also digital signal output applications. Hollow shaft angle sensors (potentiometers) are suitable for measurement, accurate positioning, position detection, and so on.

性能参数Performance Parameters

电气指标Electrical indicators

型号 Model number	WKA-D39-A　WKA-D22-B
有效行程 Valid itinerary	WKA-D39-A：0-335°　WKA-D22-B：0-300°
阻值范围 Resistance range	0-5000Ω
输出轴 Output shaft	内孔Φ5.9 bore ϕ5.9
线性精度 Linear accuracy	±0.3%FS
输出信号 Output signal	分压器 voltage divider

性能指标Performance indicators

重复精度 Repeatability	0.007°	工作温度 Operating temperature	-60°C~ +125°C
温度漂移 Temperature drift	9ppm/°C	工作速度 Working speed	600rpm
防护等级 Protection class	IP55	使用寿命（次） Service life (times)	100x10^6

产品尺寸图Product Dimension Drawing

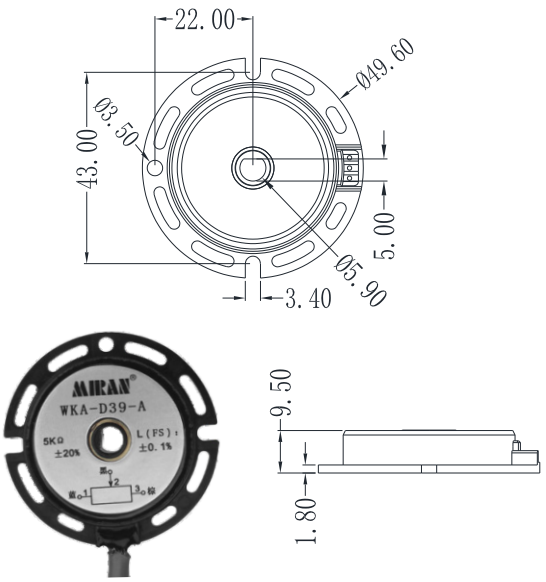

WKA-D39-A

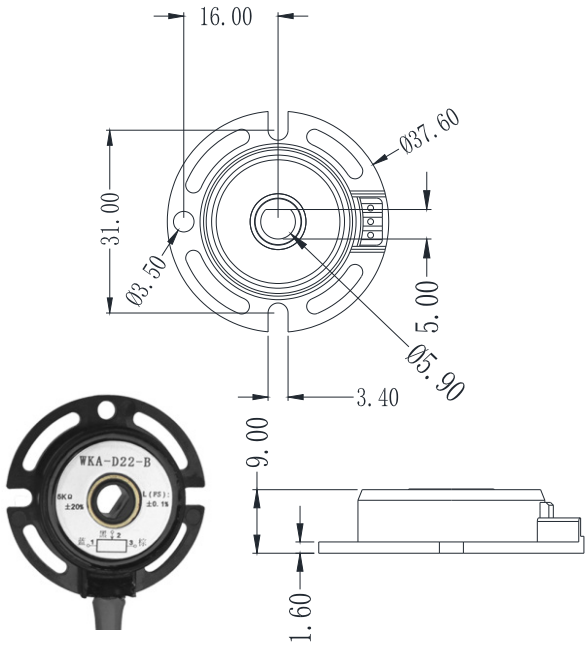

WKA-D22-B

安装示意图Installation Diagram

侧式安装side mounting

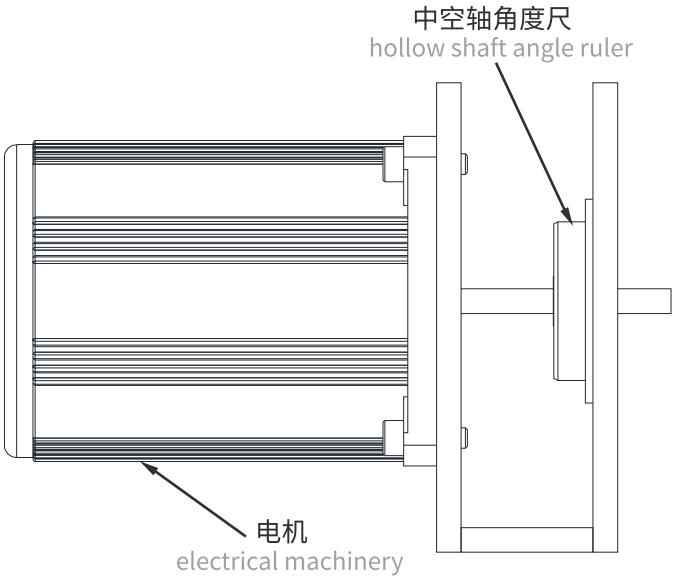

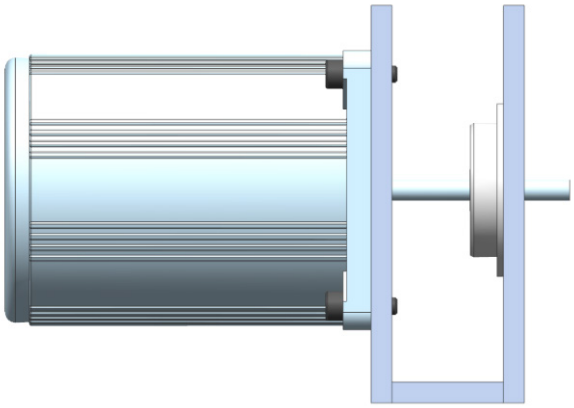

垂直倒置安装vertical inverted mounting

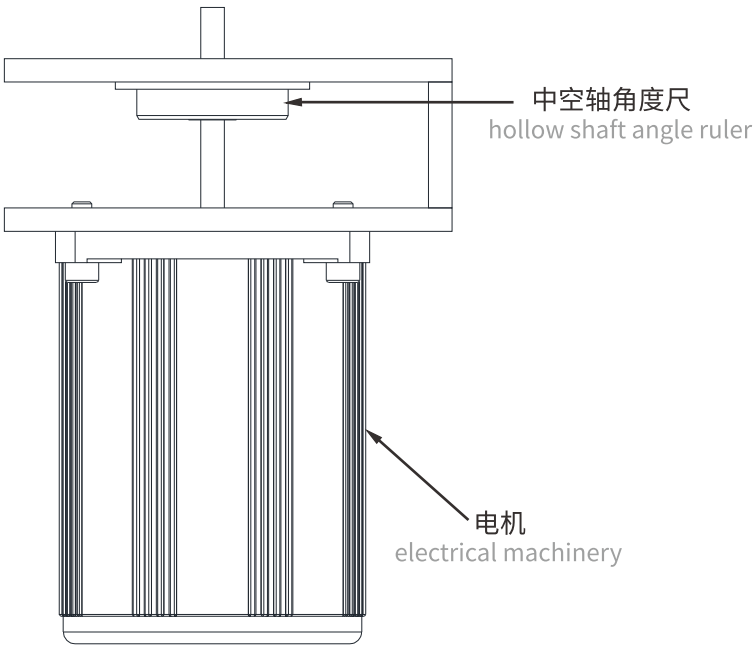

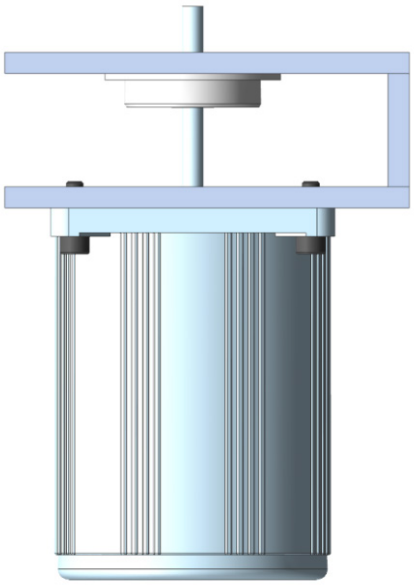

建议安装方式:侧式安装或垂直倒置安装方式,可有效避免油污水垢渗入。

suggested installation method: side installation or vertical inverted installation method, which can effectively avoid the penetration of grease and scale.

MZK系列单圈中空轴角度传感器
MZK Series Monocyclic Hollow Shaft Openness Sensors

产品实物图Product Picture



产品概述Product Overview

MZK-（6mm-50mm）-C中空轴角度传感器为绝对位置测量型，该传感器适用于各种模拟量输出的应用，又能兼具数字信号输出，比如，如果它同时和A/D变换器配合使用，则构成性价比及高的数字型值编码器，可用于精准确定位/位置检测等。

MZK系列中空轴角度传感器共有6种输出中心孔轴可选，分别为6mm、10mm、20mm、30mm、40mm、50mm，测量角度范围是0-350°；搭配外置式变送模块，供电12-24V，可选0-5V，0-10V，4-20mA，RS485信号输出。供电5V/10V，电位计原理电阻输出0-5V/0-10V。

MZK-(6mm-50mm)-C hollow shaft angle sensors for absolute position measurement type, the sensor is suitable for a variety of analog output applications, but also has a digital signal output, for example, if it is also used in conjunction with the A/D converter, it constitutes a cost-effective and high digital value encoder, can be used for precise positioning/position detection, etc.

The MZK series of hollow shaft angle sensors are available in six types There are 6 types of hollow shaft angle sensors, respectively 6mm, 10mm, 20mm, 30mm, 40mm, 50mm, and the measuring angle range is 0-350°, with external transmitter module, power supply 12-24V, optional 0-5V, 0-10V,4-20mA, RS485 signal output. Power supply 5V/10V, potentiometer principle resistance output 0-5V/0-10V.

性能参数Performance Parameters

电气指标Electrical indicators

测角范围 Side angle range	0-350°	电源线长 Power cord length	1m
线性精度 Linear accuracy	±0.1%FS	温度漂移 Temperature drift	9ppm/℃
重复精度 Repeatability	0.01°	工作温度 Operating temperature	-40℃~+100℃
防护等级 Protection class	IP65	MAX转速 MAX rpm	600rpm
电阻值 Resistance value	5KΩ±10%（10KΩ可接受非标定制） 5KΩ±10% (10KΩ can accept non-standard customization)		
输出中心孔轴 Output center hole shaft	6mm、10mm、20mm、30mm、40mm、50mm		
输出信号 Output signal	（供电+DC 12~24V）0-5V，0-10V，4-20mA，RS485均需外置模块 (power supply +DC 12~24V) 0-5V, 0-10V, 4-20mA, RS485 all need external module		
	(供电+DC 5V/10V) 电位计输出0-5V/0-10V (supply +DC 5V/10V) potentiometer output 0-5V/0-10V		

产品尺寸图Product Dimension Drawing

MZK-6mm-C

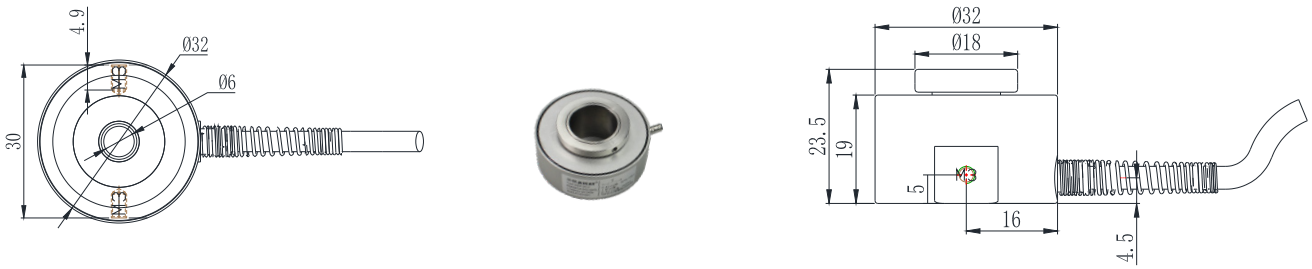

MZK-10mm-C



注：MZK-6mm-C、MZK-10mm-C研发中，如有需要请与生产沟通。

Note: MZK-6mm-C and MZK-10mm-C are under research and development, please communicate with production if needed.

产品尺寸图Product Dimension Drawing

MZK-20mm-C



MZK-30mm-C

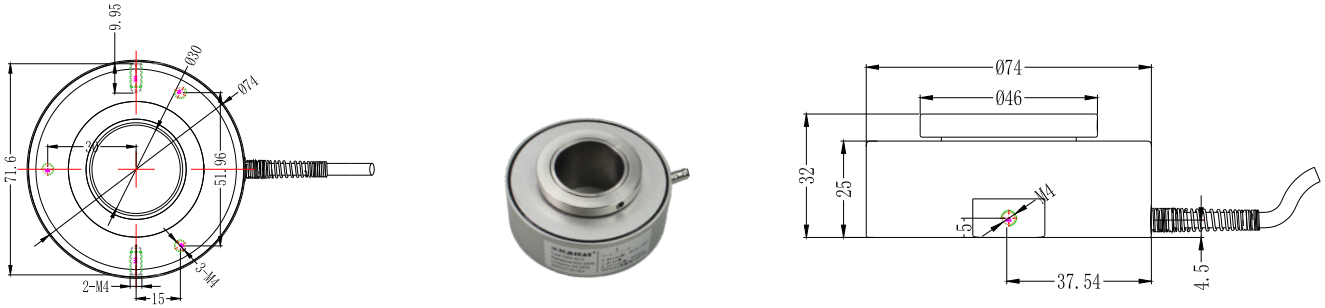

MZK-40mm-C

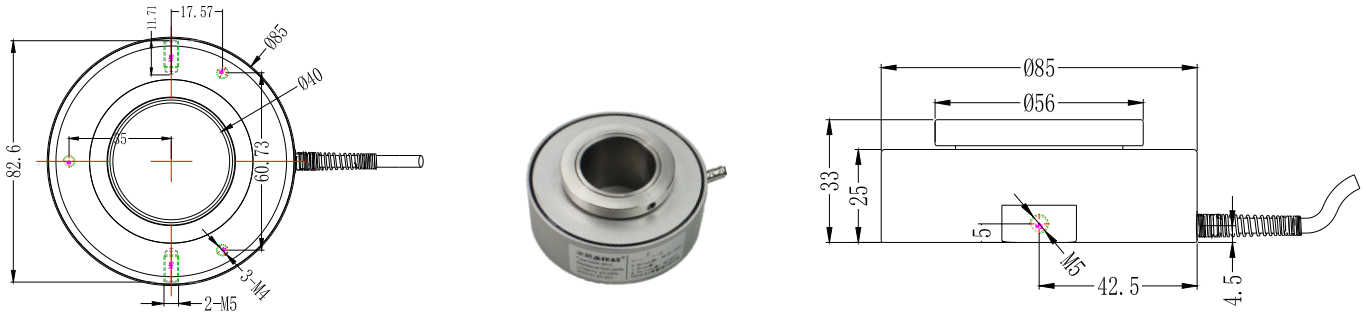

MZK-50mm-C

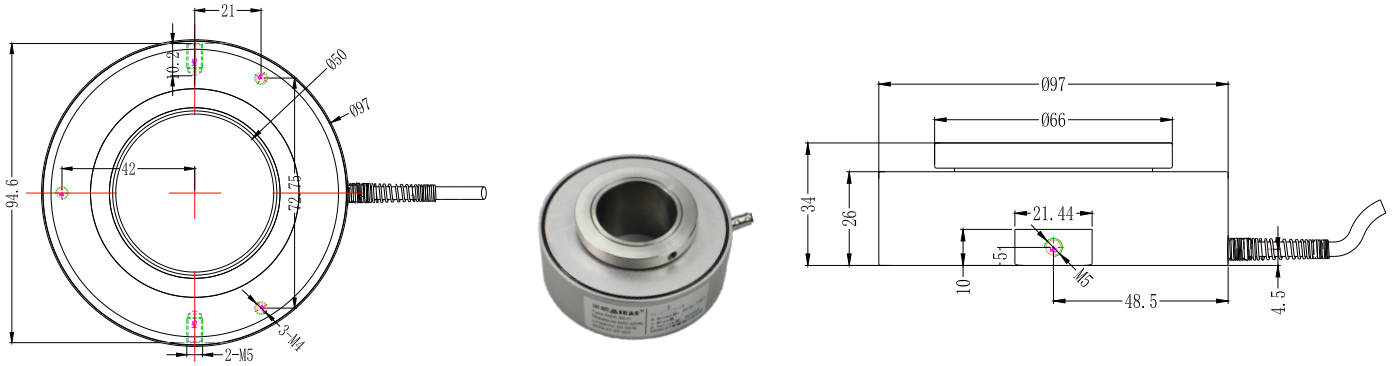

安装示意图Installation Diagram

侧式安装side mounting

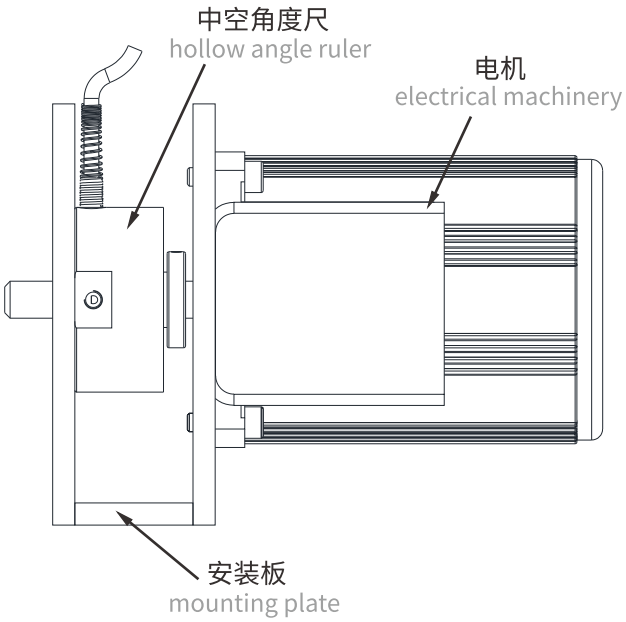

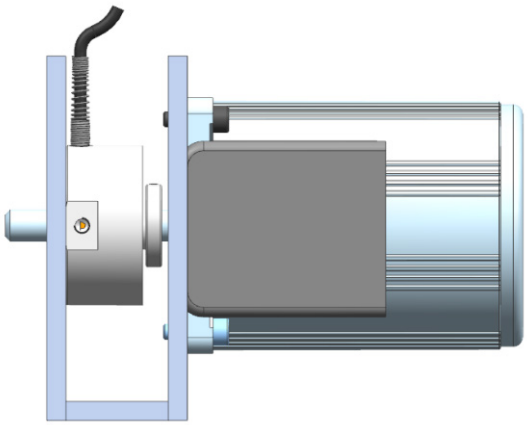

垂直倒置安装vertical inverted mounting

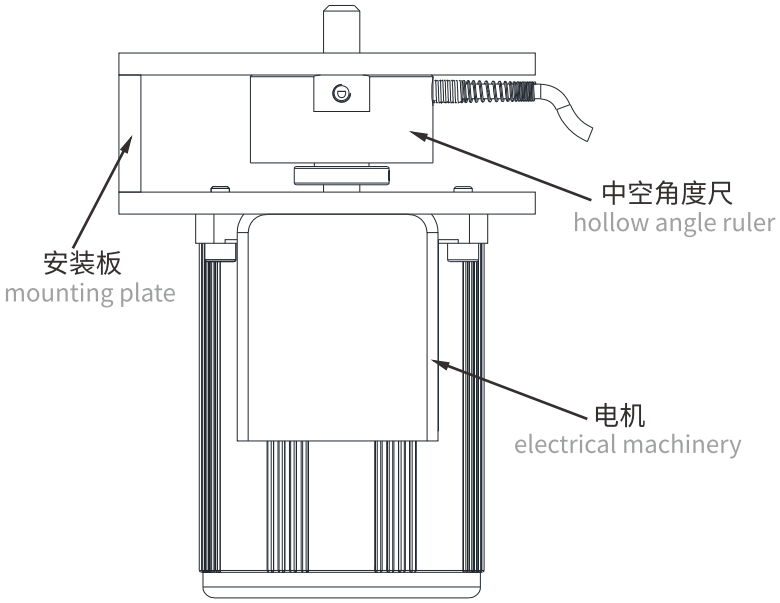

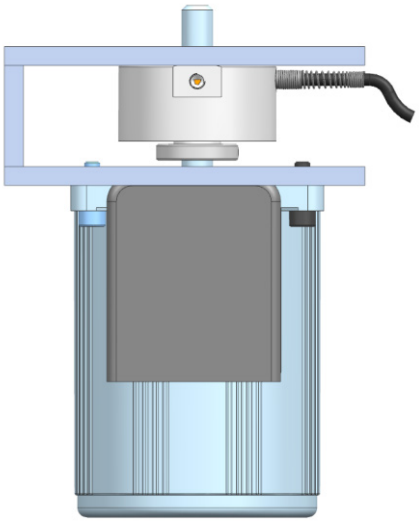

建议安装方式:侧式安装或垂直倒置安装方式,可有效避免油污水垢渗入

suggested installation method: side installation or vertical inverted installation method, which can effectively avoid the penetration of grease and scale.

磁感应原理角度传感器(绝对值型) Magnetic induction principle angle sensor(absolute value type)

依靠先进的薄膜过程技术制造的TMR元件是一种薄膜元件，具有2层强磁性体层（自由层/固定层）夹住1～2nm的薄绝缘体的势垒层的结构。固定层的磁化方向被固定，但自由层的磁化方向根据外部磁场方向而变，元件的电阻也随之而变。当固定层与自由层的磁化方向平行时，电阻最小，势垒层流过大电流。另外，当磁化方向为反向平行时，电阻极端地变大，势垒层几乎没有电流流过。如果在TMR传感器上使磁铁旋转，自由层的磁化方向追随磁铁的磁场方向，元件的电阻连续变化。由于电阻值与固定层和自由层的磁化方向的相对角成正比，可当作角度传感器利用。

The TMR element, which is manufactured by advanced thin film process technology, is a thin film element with the structure of a barrier layer of a thin insulator of 1 to 2 nm sandwiched between two layers of a strong magnet (free layer/fixed layer). The magnetization direction of the fixed layer is fixed, but the magnetization direction of the free layer varies according to the direction of the external magnetic field, and the resistance of the element varies accordingly. When the fixed layer is parallel to the magnetization direction of the free layer, the resistance is minimized and a large current flows in the barrier layer. Alternatively, when the magnetization direction is antiparallel, the resistance becomes extreme and almost no current flows in the barrier layer. If the magnet is made to rotate on the TMR sensor, the magnetization direction of the free layer follows the magnetic field direction of the magnet, and the resistance of the element varies continuously. Since the resistance value is proportional to the relative angle between the magnetization directions of the fixed and free layers, it can be utilized as an angle sensor.

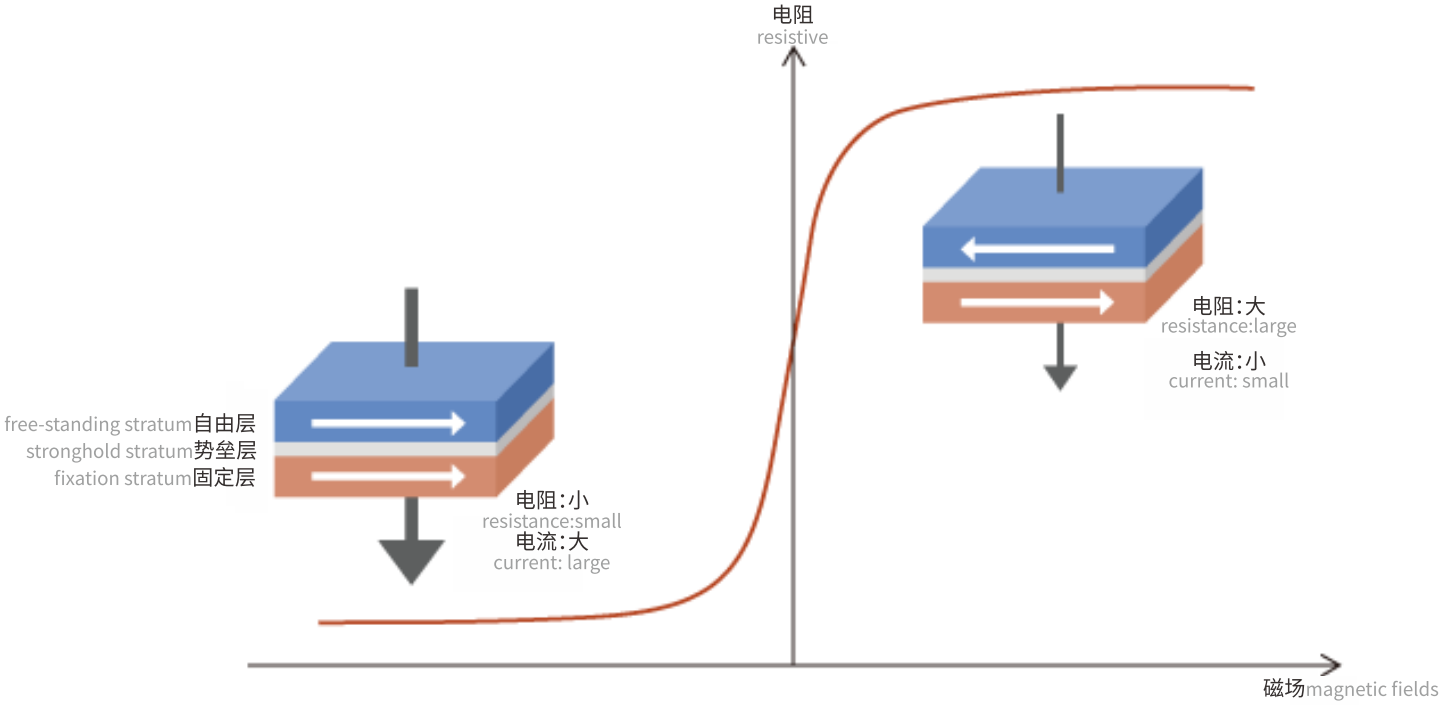

TMR的原理
Principles of TMR

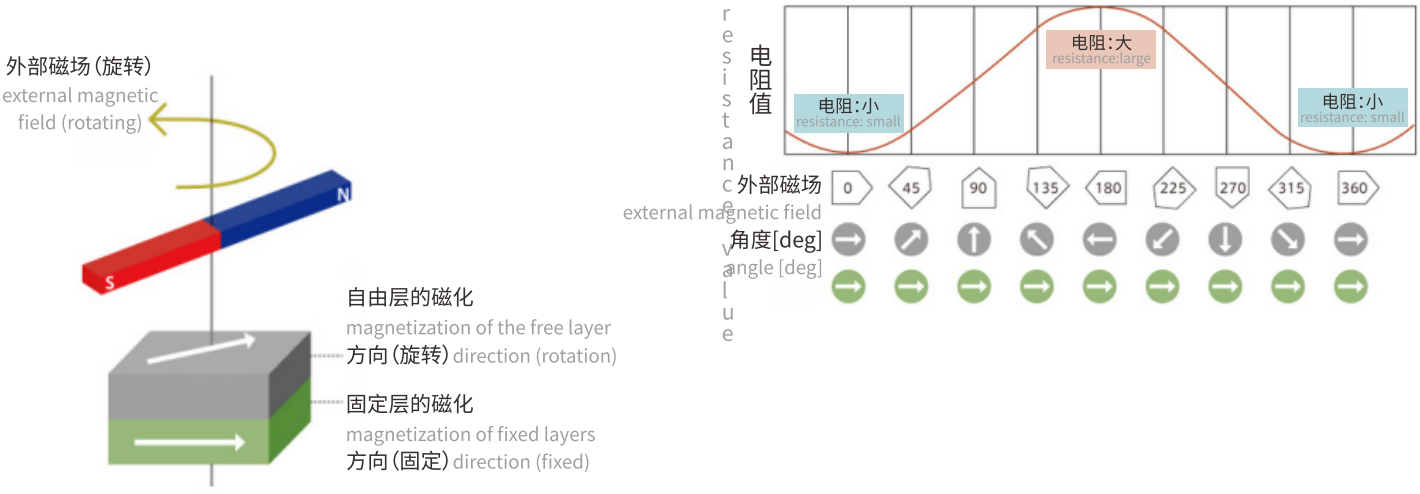

利用TMR元件支撑角度传感器的原理
Principle of supporting angle sensors using TMR elements

图一:当自由层与固定层的磁化方向平行时,电阻变小,流过大电流;

图二:当自由层与固定层的磁化方向为反向平行时,电阻变大,只流过微弱的电流。

Figure 1: when the direction of magnetization of the free layer is parallel to that of the fixed layer, the resistance becomes small and a large current flows; Figure 2: when the magnetization direction of the free layer and the fixed layer is antiparallel, the resistance becomes large and only a weak current flows.

接触式原理和非接触原理 传感器特色和优点
Contact vs Non-contact Operating Principles & Features of Sensors

接触式电位计原理 Contact Potentiometer Principle

电刷在线路板上接触刷动，输出电信号。
The wiper slides in physical contact with the circuit board to output electrical signals.

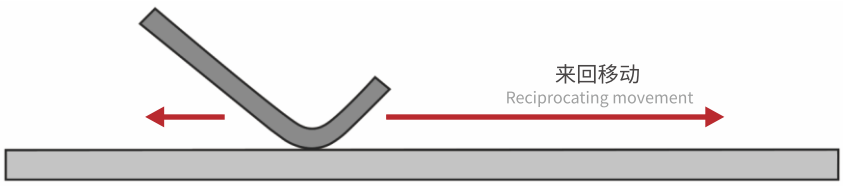

部件和底板直接摩擦接触
The component is in direct frictional contact with the base plate

优点：精度一般，很可靠，经济实惠，抗干扰强。
Advantages: Moderate accuracy, high reliability, cost-effective, strong anti-interference capability.

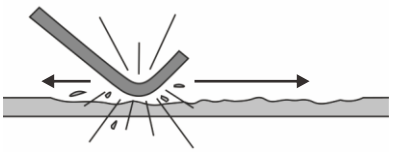

缺点：有磨损，寿命有限，外观设计结构单一。
Disadvantages: Subject to wear, limited service life, limited structural design options.

非接触感应原理 Non-contact Sensing Principle

磁致伸缩，LVDT，电涡流，电容，光栅，磁栅，光编码，磁编码，电感编码等非接触感应原理。
Includes magnetostriction, LVDT, eddy current, capacitance, optical grating, magnetic grating, optical encoding, magnetic encoding, inductive encoding and other non-contact sensing principles.

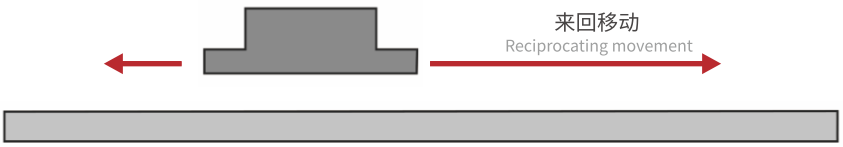

感应件和底板留有间隙，不发生物理接触
There is a gap between the sensing element and the base plate; no physical contact occurs.

优点：精度高，无磨损，寿命长，外观设计结构多样。
Advantages: High accuracy, no wear, long service life, diverse structural design options.

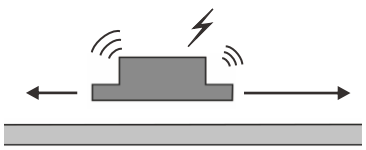

缺点：成本略高，部分产品抗各类干扰性能略差。
Disadvantages: Slightly higher cost; some variants have weaker anti-interference performance.

WOA-B/WOA-B1/WOA-B2/WOA-C1 /WOA-C2系列单圈角度传感器
Series Monoclinic Sensor

产品实物图Product Picture

WOA-B





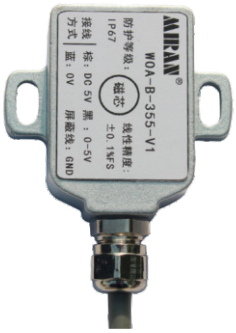

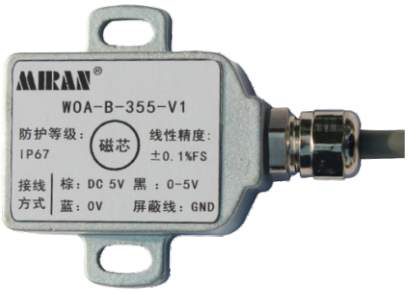

WOA-B1









WOA-B2









WOA-C1 直出线direct line







WOA-C2 侧出线lateral outlet







产品型号选型Product Model Selection

WOA - □ - □□□ - □□

磁感应角度传感器
magnetic induction angle sensor

B:方形电子仓
B: square electronic silo

B1:不锈钢圆形电子仓
B1: stainless steel round electronic silo

B2:微型电子仓
B2: miniature electronic silo

C1:圆形电子仓(直出线)
C1: circular electronic silo(direct line)

C2:圆形电子仓(侧出线)
C2: circular electronic silo(lateral outlet)

角度值angle value:0-360°
模拟量信号输出0-355°内可任意定制角度，
数字信号输出角度值固定为0-360°
the analog signal output can be customized to any angle within 0-355°, and the digital signal output angle value is fixed at 0-360°

V1:0-5V 输出
V1: 0-5V output

V2:0-10V 输出
V2: 0-10V output

A:4-20mA 输出
A: 4-20mA output

R:RS485 输出
R: RS485 output

注:RS485输出仅限B1、B2、C1、C2型结构。
Note: RS485 output is limited to B1, B2, C1, C2 type structures.

例如Example:

WOA-B-5-V1:代表米朗霍尔角度传感器方形电子仓，5°，0-5V信号输出。
WOA-B-5-V1: represents miran hall angle sensor square e-bin, 5°, 0-5V signal output.

产品概述Product Overview

米朗科技WOA-B、WOA-B1、WOA-B2、WOA-C1、WOA-C2系列霍尔角度传感器，采用磁感应原理（内部非接触式）测量角度，具有无触点、长寿命、高分辨、高频响、低温漂、优线性、耐振抗冲、抗干扰等特点。

霍尔角度（磁感应）位移传感器特点:无接触、无噪音、高灵敏度、高重复性、长寿命、高频响应特性好；环境适用性强，可用于水、油、汽、粉尘、高低温、振动冲击等恶劣工业使用环境；位置测量，是替代光学编码器、旋转变压器、导电塑料电位器的理想产品。

米朗科技WOA-B、WOA-B1、WOA-B2、WOA-C1、WOA-C2系列霍尔角度传感器模拟量信号输出355度以内的角度可以任意定制，如90度、180度、200度等均可生产，数字量信号输出则不可任意定制角度；供电电压+DC24V，输出信号有0～5V、0～10V、4～20MA、RS485等，RS485输出仅限B1、B2、C1、C2型电子仓。WOA-B系列角度传感器安装时电子仓主体感应面与磁芯同心且间距小于5mm。

Miran technology WOA-B, WOA-B1, WOA-B2, WOA-C1, WOA-C2 series hall angle sensors, using the principle of magnetic induction (internal non-contact) to measure the angle, with no contact, long life, high resolution, high frequency resonance, low temperature drift, excellent linearity, vibration and shock resistance, anti-interference and other characteristics.

Hall angle (magnetic induction) displacement sensor features: no contact, no noise, high sensitivity, high repeatability, long life, good high-frequency response characteristics; environmental applicability, can be used for water, oil, steam, dust, high and low temperatures, vibration and shock and other harsh industrial use of the environment; position measurement, is an alternative to the optical encoder, rotary transformer, conductive plastic potentiometer ideal product.

WOA-B, WOA-B1, WOA-B2, WOA-C1, WOA-C2 series of angle sensors can be customized to any angle up to 355 degrees in the analog signal output, e.g. 90 degrees, 180 degrees, 200 degrees, etc. while the digital signal output can not be customized to any angle; the power supply voltage is +DC24V, and the output signals are 0-5V, 0-10V, 4-20MA, RS485, etc. The RS485 output is only available for B1, B2, C1, C2 type electric subcompartment. The output signals are 0~5V, 0~10V, 4~20MA, RS485, etc. The RS485 output is only available for B1, B2 and C1, C2 type sub-barriers.

性能参数Performance Parameters

电气指标Electrical indicators

WOA-B 输出信号 Output signal	(供电+DC 12~24V) 0-5V, 0-10V, 4-20mA (power supply +DC 12~24V) 0-5V, 0-10V, 4-20mA
	(供电+DC 5V) 0-5V (power supply +DC 5V) 0-5V
WOA-B1/WOA-B2 输出信号 Output signal	(供电+DC 12~24V) 0-5V, 0-10V, 4-20mA (power supply +DC 12~24V) 0-5V, 0-10V, 4-20mA
	(供电+DC 5V) 0-5V, RS485 (power supply +DC 5V) 0-5V, RS485
WOA-C1/WOA-C2 输出信号 Output signal	(供电+DC 12~24V) 0-5V, 0-10V, 4-20mA, RS485 (power supply +DC 12~24V) 0-5V, 0-10V, 4-20mA, RS485
	(供电+DC 5V) 0-5V (power supply +DC 5V) 0-5V
WOA-B测角范围 Woa-b angle measuring range	0-355°(模拟量输出可任意定制) 0-355° (analog output can be customized)
WOA-B1/WOA-B2/ WOA-C1/WOA-C2 测角范围 Angle measuring range	模拟量输出(0-355°, 可任意定制角度) analog output (0-355°, any customizable angle)
	RS485输出(0-360°, 不可任意定制角度) RS485 output (0-360°, not customizable to any angle)
重复精度 Repeatability	0.01°
线性精度 Linear accuracy	±0.1%FS
工作温度 Operating temperature	-35°C~+65°C
MAX转速 MAX rpm	3000rpm
温度漂移 Temperature drift	9ppm/°C
防护等级 Protection class	IP65(WOA-C1/WOA-C2)
	IP68(WOA-B/WOA-B1/WOA-B2)

电气连接Electrical Connection

接线定义 wiring definition 模拟量信号输出 analog signal output	棕色 BROWN	黑色 BLACK	蓝色 BLUE	屏蔽层 SHIELDING LAYER
	电源正 power positive +DC 5V	输出 exports 0-5V	电源负 power negative 0V	GND

接线定义 wiring definition 模拟量信号输出 analog signal output	棕色 BROWN	黑色 BLACK	蓝色 BLUE	屏蔽层 SHIELDING LAYER
	电源正 power positive +DC 12-24V	输出 exports 0-5V, 0-10V,4-20mA	电源负 power negative 0V	GND

接线定义 wiring definition 数字量信号输出 digital signal output (限B1、B2型结构) (B1, B2 structures only)	棕色 BROWN	黑色 BLACK	蓝色 BLUE	白色 WHITE	屏蔽层 SHIELDING LAYER
	电源正 power positive +DC 5V	输出负 negative output 0V	RS485 A	RS485 B	GND

接线定义 wiring definition 数字量信号输出 digital signal output (限C1、C2型结构) (C1, C2 structures only)	棕色 BROWN	黑色 BLACK	绿色 GREEN	白色 WHITE	屏蔽层 SHIELDING LAYER
	电源正 power positive +DC 12-24V	电源负 power negative 0V	RS485 A	RS485 B	GND

产品尺寸图Product Dimension Drawing

WOA-B

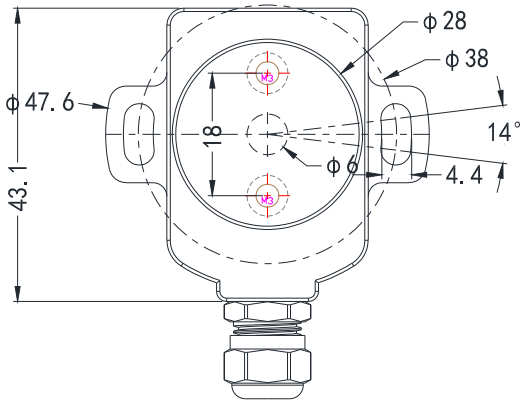



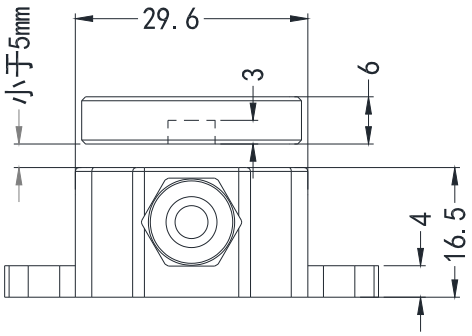

WOA-B1

模拟量输出analog output

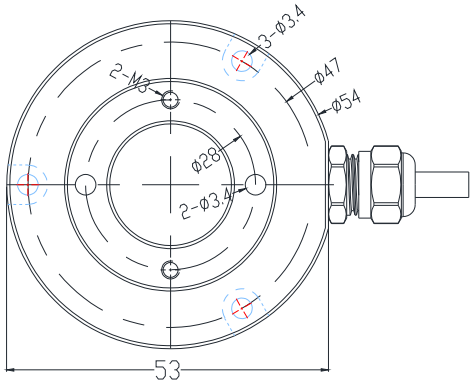

传感器与标准感应磁芯俯视图
top view of sensor with standard induction core

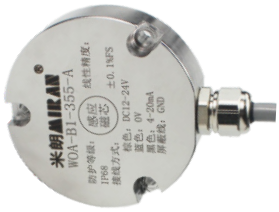

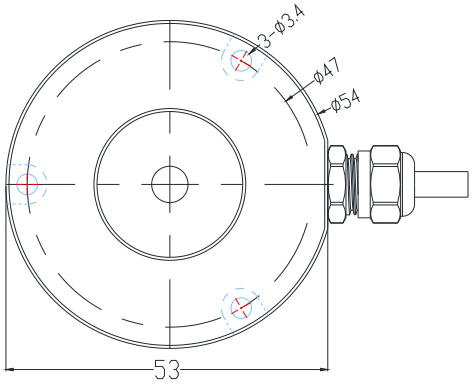

传感器与可选感应磁芯俯视图
top view of sensor with optional induction core

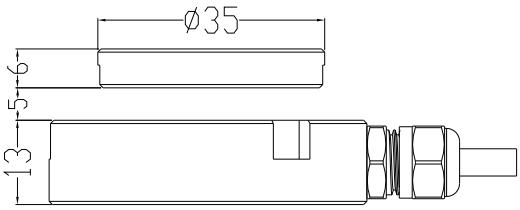

传感器与标准感应磁芯侧面图
side view of sensor with standard induction core

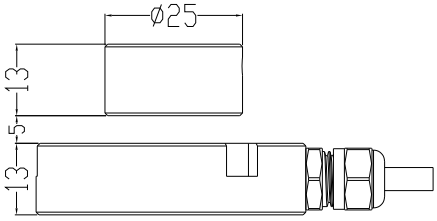

传感器与可选感应磁芯侧面图
side view of sensor with optional induction core

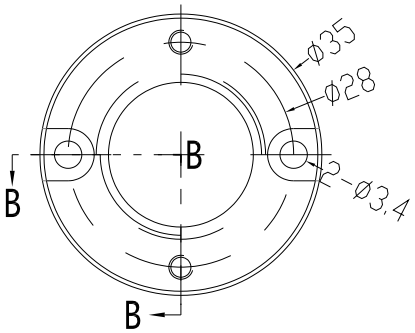

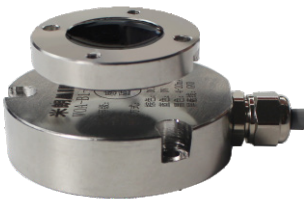

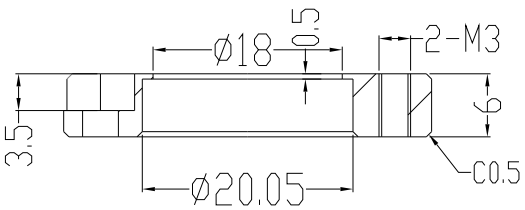

标准感应磁芯
standard induction core

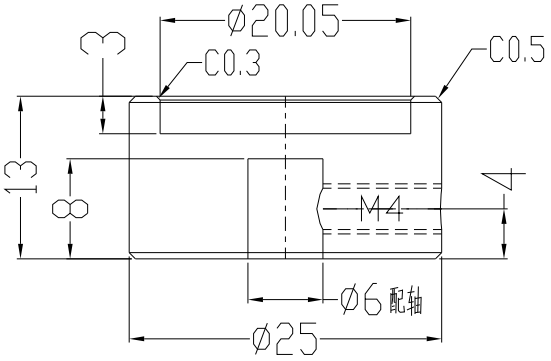

可选感应磁芯
optional induction core

WOA-B1

数字量输出digital output

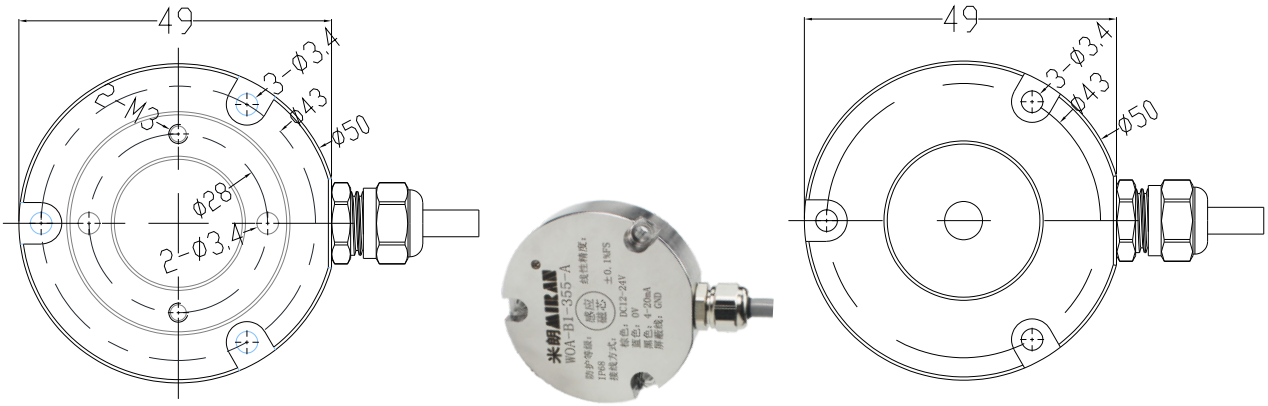

传感器与标准感应磁芯俯视图
top view of sensor with standard induction core

传感器与可选感应磁芯俯视图
top view of sensor with optional induction core

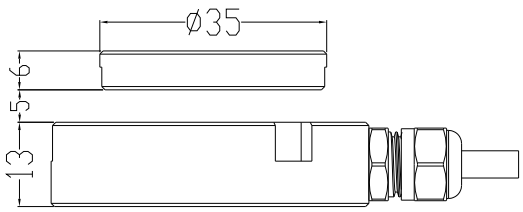

传感器与标准感应磁芯侧面图
side view of sensor with standard induction core

传感器与可选感应磁芯侧面图
side view of sensor with optional induction core

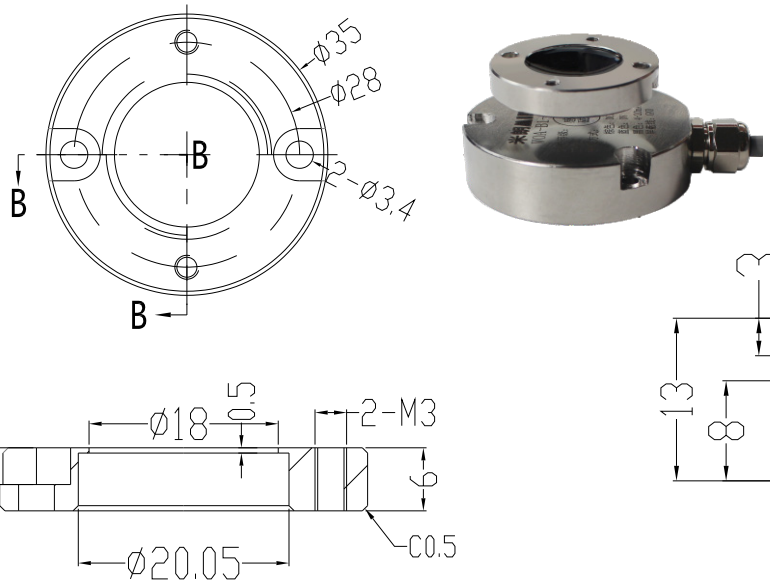

标准感应磁芯
standard induction core

可选感应磁芯
optional induction core

产品尺寸图Product Dimension Drawing

WOA-B2

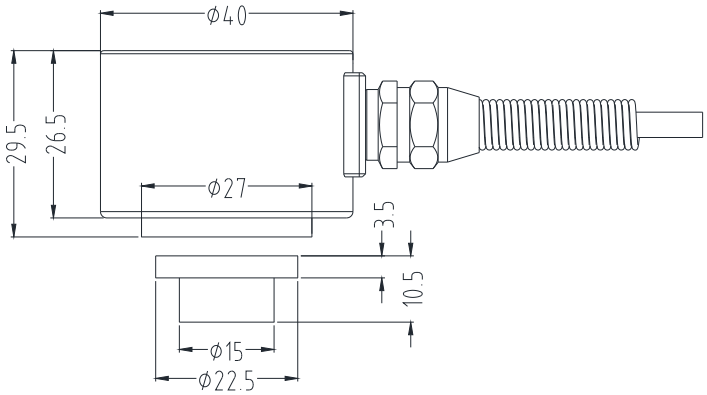

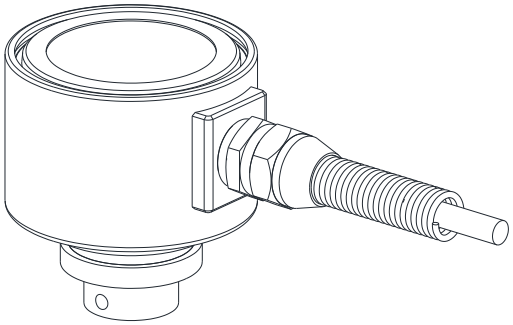

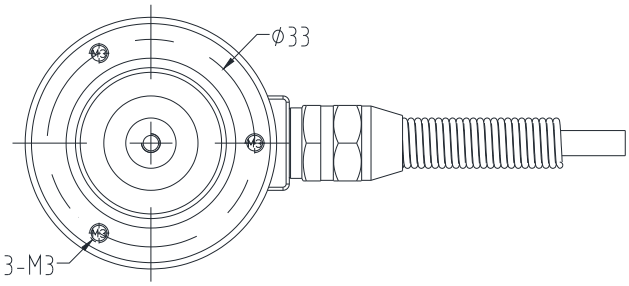



WOA-C1 直出线direct line

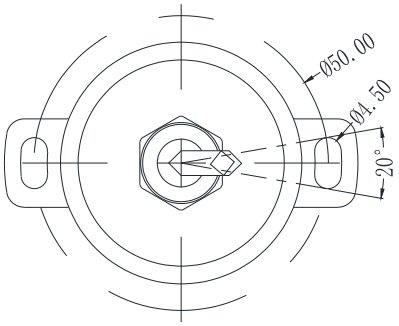



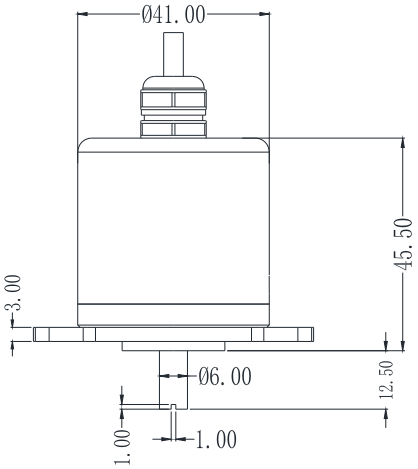

WOA-C2 侧出线lateral outlet

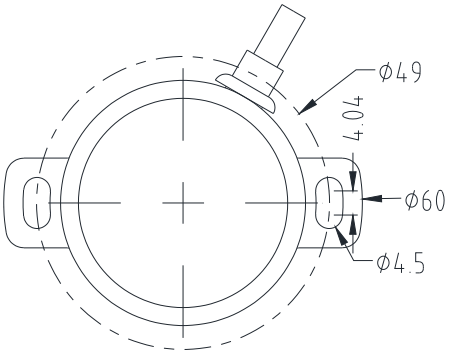



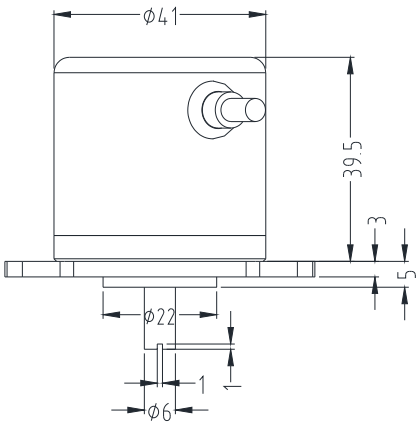

WOA-C22/WOA-C27/WOA-C37/WOA-C44
系列微型单圈角度传感器
Series Miniature Monocyclic Open-End Sensors

产品实物图Product Picture

WOA-C22







WOA-C27





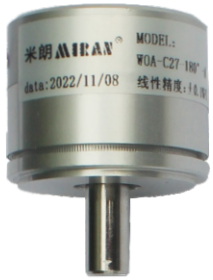

WOA-C37







WOA-C44



实心轴
hollow shaft



中空轴
hollow shaft



实心轴
hollow shaft

产品概述Product Overview

WOA-C系列微型角度位置传感器采用磁感应原理（内部非接触式）测量角度，具有无触点、长寿命、高分辨、高频响、低温漂、优线性、耐振抗冲、抗干扰等特点。广泛应用于水、油、气、振动、冲击等多种恶劣工业环境中。

WOA-C22/WOA-C27/WOA-C37/WOA-C44系列微型磁感应角度位置传感器特点：无接触、无噪音、高灵敏度、高重复性、长寿命、高频响应特性好；环境适用性强；位置测量，是替代光学编码器、旋转变压器、导电塑料电位器的理想产品；该系列产品模拟量信号输出355度以内的角度可以任意定制，如90度、180度、200度等均可生产。其中WOA-C22/WOA-C27供电电压DC5V，可做0-5V输出，WOA-C37/WOA-C44供电电压DC12-24V，输出信号有0～5V、0～10V、4～20MA，另外WOA-C44供电电压DC5V，还可做RS485信号输出。

WOA-C series miniature angle position sensor adopts magnetic induction principle (internal non-contact) to measure the angle, featuring non-contact, long life, high resolution, high frequency response, low temperature drift, excellent linearity, vibration and shock resistance, anti-interference, etc. It is widely used in water, oil, gas, vibration, shock and other harsh industrial environments. Widely used in water, oil, gas, vibration, shock and other harsh industrial environments.

WOA-C22/WOA-C27/WOA-C37/WOA-C44 series miniature magnetic inductive position sensors are characterized by: no contact, no noise, high sensitivity, high repeatability, high life, high frequency response, high environmental usability, position measurement, and are ideal replacements for optical encoders, resolvers, and conductive plastic potentiometers. The WOA-C22/C22 can be customized to any angle up to 355 degrees, such as 90 degrees, 180 degrees, 200 degrees, etc. The WOA-C22/C22 can be customized to any angle up to 355 degrees. The WOA-C22/WOA-C27 are available in 0-5V output with DC5V supply voltage, and the WOA-C37/WOA-C44 are available in 0-5V, 0-10V, and 4-20MA output with DC12-24V supply voltage, while the WOA-C44 is available in RS485 output with DC5V supply voltage.

性能参数Performance Parameters

电气指标Electrical indicators

测角范围 Angle Measuring Range	0-355°(模拟量输出可任意定制角度) 0-355° (analog output can be customized to any angle)		
	0-360°(RS485输出,不可任意定制角度) 0-360° (RS485 output, cannot customize the angle arbitrarily)		
输出信号 Output Signal	(供电+DC 12~24V) 0-5V, 0-10V, 4-20mA (power supply +DC 12~24V) 0-5V, 0-10V, 4-20mA		
	(供电+DC 5V) 0-5V, RS485 (power supply +DC 5V) 0-5V, RS485		
线性精度 Linear Accuracy	±0.1%FS	重复精度 Repeatability	0.01°
防护等级 Protection Class	IP65	MAX转速 MAX Rpm	3000rpm
温度漂移 Temperature Drift	9ppm/°C	工作温度 Operating Temperature	-40°C~80°C

电气连接Electrical Connection

接线定义 wiring definition	棕色 BROWN	黑色 BLACK	蓝色 BLUE	屏蔽层 SHIELDING LAYER
模拟量信号输出 analog signal output	电源正 power positive +DC 5V	输出 exports 0-5V	电源负 power negative 0V	GND

接线定义 wiring definition	棕色 BROWN	黑色 BLACK	蓝色 BLUE	屏蔽层 SHIELDING LAYER
模拟量信号输出 analog signal output	电源正 power positive +DC 12-24V	输出 exports 0-5V, 0-10V	电源负 power negative 0V	GND

接线定义 wiring definition	棕色 BROWN	黑色 BLACK	蓝色 BLUE	屏蔽层 SHIELDING LAYER
模拟量信号输出 analog signal output	电源正 power positive +DC 12-24V	输出 exports 4-20mA	电源负 power negative 0V	GND

接线定义 wiring definition	棕色/红色 BROWN/RED	黑色 BLACK	绿色 GREEN	白色 WHITE	屏蔽层 SHIELDING LAYER
数字量信号输出 digital signal output	电源正 power positive +DC 5V	电源负 power negative 0V	RS485 A	RS485 B	GND

产品型号选型Product Model Selection

WOA - □□□ - □ - □□ / □

角度传感器
angle sensor

C22：直径22mm圆形磁感应（限DC5V供电，0-5V输出）
C22: diameter 22mm round magnetic induction (DC5V supply only, 0-5V output)

C27：直径27mm圆形磁感应（限DC5V供电，0-5V输出）
C27: diameter 27mm round magnetic induction (DC5V supply only, 0-5V output)

C37：直径37mm圆形磁感应
C37: diameter 37mm round magnetic induction

C44：直径44mm圆形磁感应
C44: diameter 44mm round magnetic induction

0-360°可选
0-360° optional

V1：0-5V输出
V1: 0-5V output

V2：0-10V输出
V2: 0-10V output

A：4-20mA输出
A: 4-20mA output

R：RS485输出（限C44类型）
R: RS485 output(C44 type only)

Z：实心轴
Z:solid shaft

ZK：中空轴（限C44类型）
ZK: hollow shaft (C44 type only)

注：模拟量输出0-355°内可任意定制角度，RS485输出测量角度固定为0-360°，不可任意定制角度。
Note: The analog output can be customized to any angle within 0-355°, while the RS485 output measures a fixed angle of 0-360° and cannot be customized to any angle.

例如Example:

WOA-C22-5-V1/Z：代表米朗微型磁感应角度传感器直径22mm，圆形磁感应5°，0-5V信号输出实心轴
WOA-C22-5-V1: stands for miran miniature magnetic induction angle sensor diameter 22mm, round magnetic induction 5°, 0-5V signal output solid shaft

产品尺寸图Product Dimension Drawing

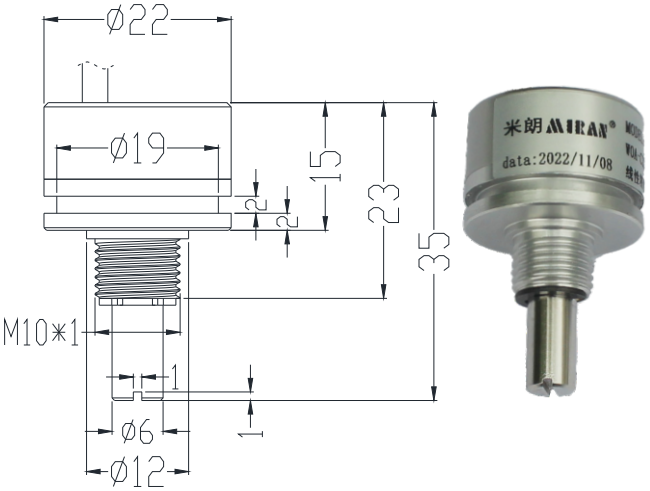

WOA-C22-180°-A

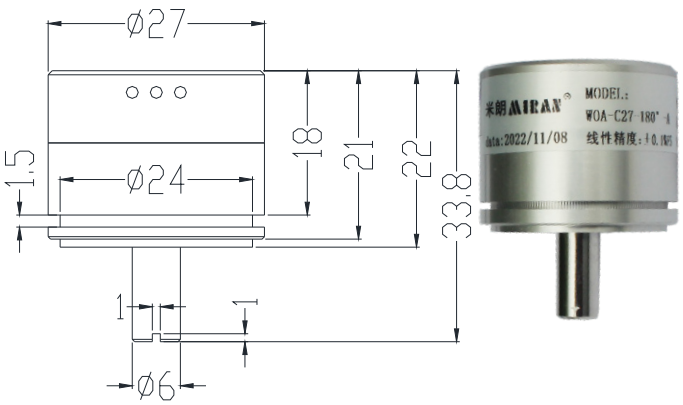

WOA-C27-180°-A

产品尺寸图Product Dimension Drawing

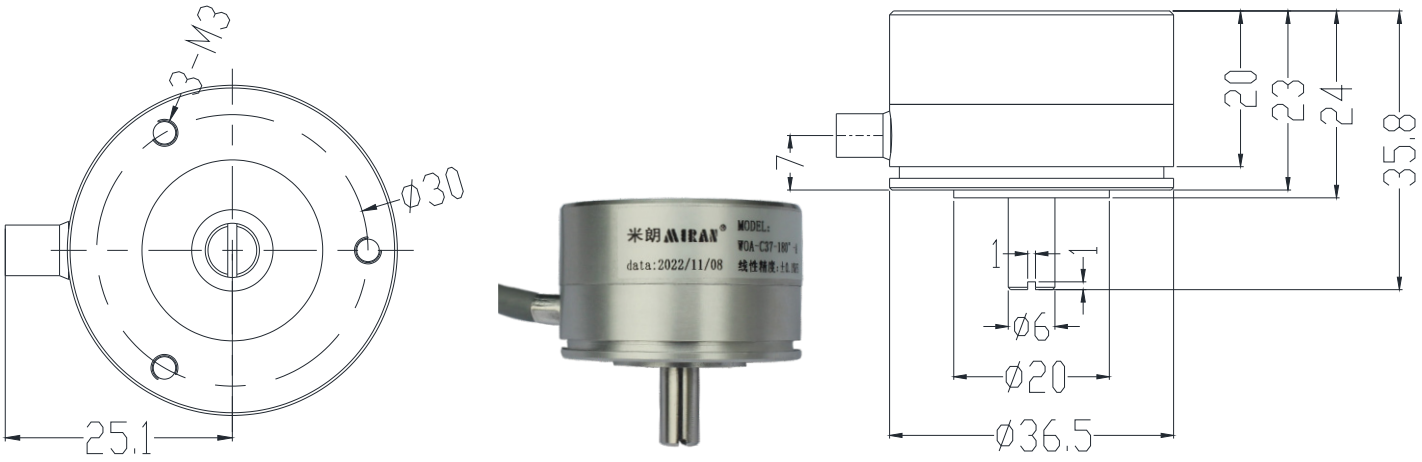

WOA-C37-180°-A

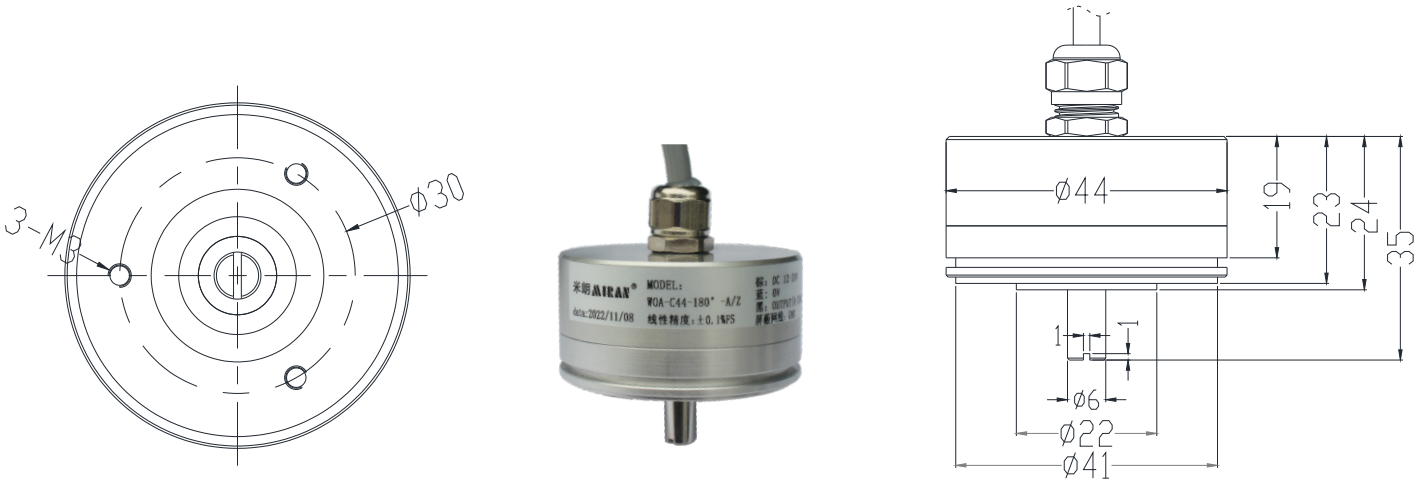

WOA-C44-180°-A/Z

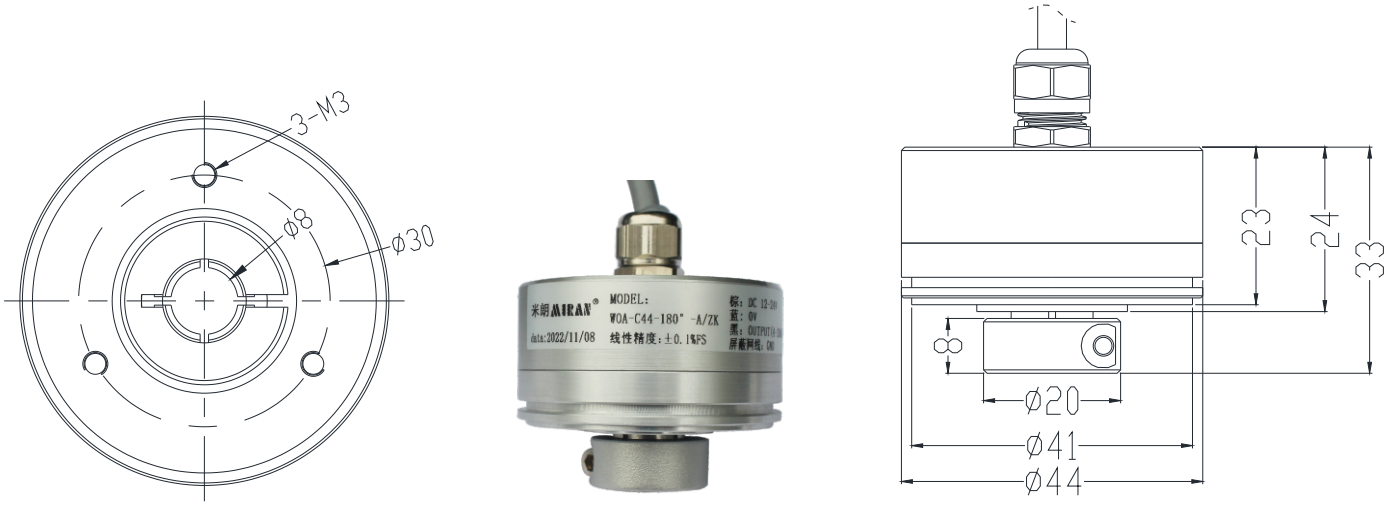

WOA-C44-180°-A/ZK

PX4500/PX6500微型单圈角度传感器
PX4500/PX6500 Miniature Monoclinic Sensors

产品实物图Product Picture

PX4500







PX6500







产品概述Product Overview

PX系列角度位移传感器采用磁感应原理(内部非接触式)测量角度,具有无触点、长寿命、高分辨、高频响、低温漂、优线性、耐振抗冲、抗干扰等特点。广泛应用于水、油、气、振动、冲击等多种恶劣工业环境中。

PX系列磁感应角度位移传感器特点:无接触、无噪音、高灵敏度、高重复性、长寿命、高频响应特性好;环境适用性强;位置测量,是替代光学编码器、旋转变压器、导电塑料电位器的理想产品;该系列产品模拟量信号输出355°以内的角度可以任意定制,如90°、180°、200°等均可生产,数字量信号输出则不可任意定制角度。供电电压+DC12-24V,输出信号有0～5V、0～10V、4～20MA等。

PX series angle displacement sensors use magnetic induction principle (internal non-contact) to measure the angle, with no contact, long life, high resolution, high frequency, low temperature drift, excellent linearity, vibration and shock resistance, anti-interference and other characteristics. Widely used in water, oil, gas, vibration, shock and other harsh industrial environments.

PX series magnetic induction angle displacement sensor features: no contact, no noise, high sensitivity, high repeatability, long life, high frequency response characteristics; environmental applicability; position measurement, is an ideal product to replace the optical encoder, resolver, conductive plastic potentiometer;The analog output can be customized to any angle up to 355 degrees, e.g. 90 degrees, 180 degrees, 200 degrees, etc. The digital output cannot be customized to any angle. The power supply voltage is +DC12-24V, and the output signals are 0-5V, 0-10V, 4-20MA, etc. The output signals can be customized to any angle up to 355 degrees.

性能参数Performance Parameters

电气指标Electrical indicators

重复精度 Repeatability	0.01°
温度漂移 Temperature drift	9ppm/°C
工作温度 Operating temperature	-40°C~+85°C
MAX转速 MAX rpm	3000rpm
防护等级 Protection class	IP65
线性精度 Linear accuracy	+0.1%FS
测角范围 Angle measuring range	0-355°(模拟量输出可任意定制角度) 0-355° (analog output can be customized to any angle)
	0-360°(RS485输出,不可任意定制角度) 0-360°(RS485 output, cannot customize the angle arbitrarily)
输出信号 Output signal	(供电+DC 12~24V) 0-5V, 0-10V, 4-20mA (power supply +DC 12~24V) 0-5V, 0-10V, 4-20mA
	(供电+DC 5V) 0-5V, RS485 (power supply +DC 5V) 0-5V, RS485

电气连接Electrical Connection

接线定义 wiring definition 模拟量信号输出 analog signal output	棕色 BROWN	黑色 BLACK	蓝色 BLUE	屏蔽层 SHIELDING LAYER
	电源正 power positive +DC 5V	输出 exports 0-5V	电源负 power negative 0V	GND

接线定义 wiring definition 模拟量信号输出 analog signal output	棕色 BROWN	黑色 BLACK	蓝色 BLUE	屏蔽层 SHIELDING LAYER
	电源正 power positive +DC 12-24V	输出 exports 0-5V,0-10V	电源负 power negative 0V	GND

接线定义 wiring definition 模拟量信号输出 analog signal output	棕色 BROWN	黑色 BLACK	蓝色 BLUE	屏蔽层 SHIELDING LAYER
	电源正 power positive +DC 12-24V	输出 exports 4-20mA	电源负 power negative 0V	GND

接线定义 wiring definition 数字量信号输出 digital signal output	棕色 / 红色 BROWN / RED	黑色 BLACK	绿色 GREEN	白色 WHITE	屏蔽层 SHIELDING LAYER
	电源正 power positive +DC 5V	电源负 power negative 0V	RS485 A	RS485 B	GND

产品型号选型Product Model Selection

PX - □ - □□□ - □□ / □

角度传感器 angle sensor

4500：直径36.5mm圆形磁感应
4500: 36.5mm diameter round magnetic induction

6500：直径50.7mm圆形磁感应
6500: 50.7mm diameter round magnetic induction

角度值angle value：0-360°
模拟量信号输出0-355°内可任意定制角度，
数字信号输出角度值固定为0-360°
the analog signal output can be customized to any angle within 0-355°, and the digital signal output angle value is fixed at 0-360°

V1：0-5V输出
V1: 0-5V output

V2：0-10V输出
V2: 0-10V output

A：4-20mA输出
A: 4-20mA output

R：RS485输出(限6500类型)
R: RS485 output(6500 type only)

Z：实心轴
Z: solid shaft

ZK：中空轴
（限6500类型）
ZK: hollow shaft
(6500 type only)

例如Example:

PX-4500-5-V1/Z：代表米朗磁感应角度位移传感器直径36.5mm，圆形磁感应5°，0-5V信号输出实心轴
PX-4500-5-V1/Z: stands for miran magnetic induction angular displacement sensor diameter 36.5mm, round magnetic induction 5°, 0-5V signal output solid shaft

产品尺寸图Product Dimension Drawing

PX4500-90°-A/Z

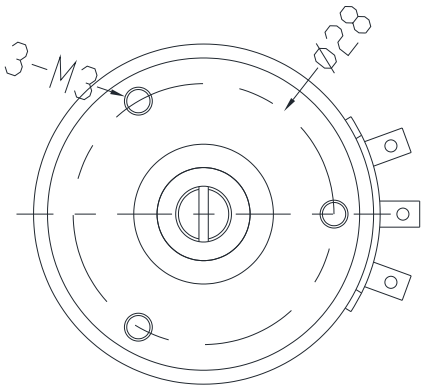



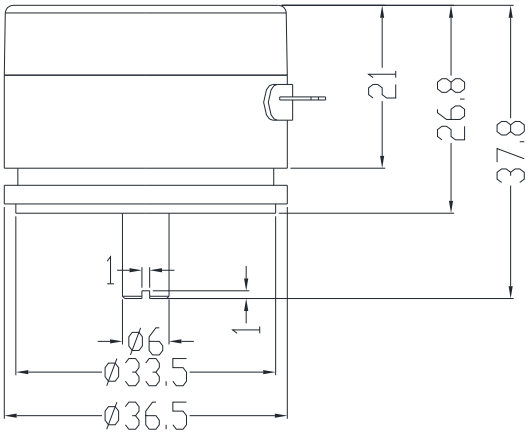

PX6500-90°-A/Z

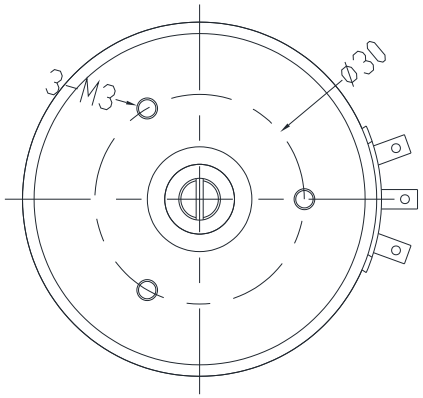



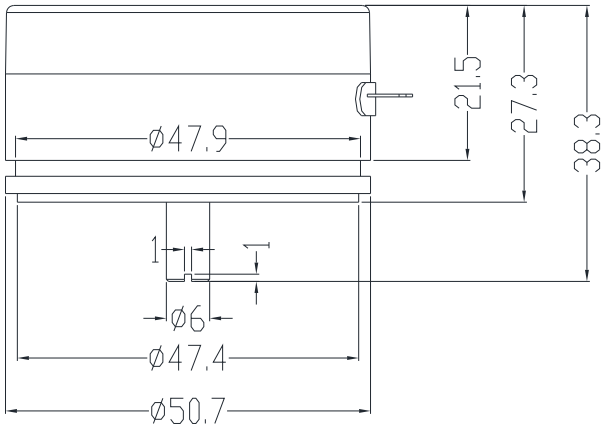

PX6500-90°-A/ZK

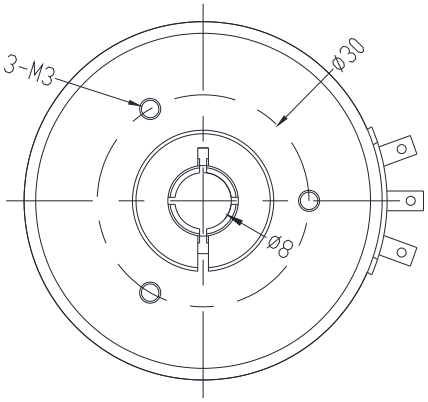



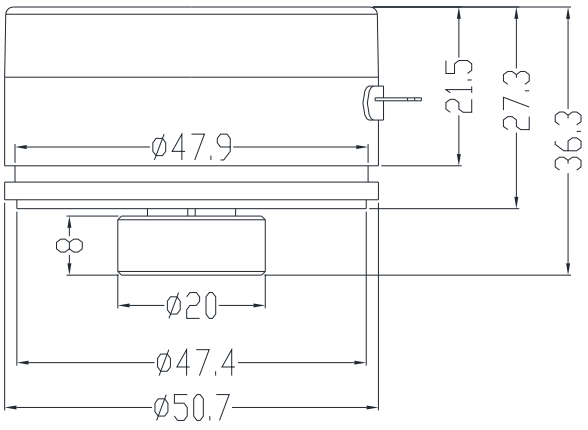

WOA-A系列多圈角度传感器
WOA-A Series Multi-circle Openness Sensor

产品实物图Product Picture







产品概述Product Overview

WOA-A系列磁感应编码器为测量电机旋转位置的非接触式编码器，产品为米朗科技自主研发的磁感应多圈传感器，并加入信号调理及算法，计算角度。WOA-A系列角度传感器支持多种信号输出（RS485半双工输出，4-20mA,0-5V,0-10V），单圈为绝对值输出模式，多圈为增量型输出模式，增量型输出模式下BAT电压小于2.8V时，多圈数据会清零。最大转速6000rmp，输出分辨率为17位，温度范围：-30℃～85℃，体积小，抗污染能力强，精度高。可应用于伺服控制系统、机器手臂、位置测量、工业自动化控制，直流电机等领域。

WOA-A series magnetic induction encoder is a non-contact encoder to measure the rotary position of motor, which is developed by miran Technology independently. The product is a magnetic induction multi-turn sensor developed by miran Technology, with signal conditioning and algorithm to calculate the angle. WOA-A series angle sensors support a variety of signal output (RS485 half-duplex output, 4-20mA,0-5V,0-10V), Single-turn is absolute output mode, multi-turn is incremental output mode, and multi-turn data will be cleared to zero when BAT voltage is less than 2.8V in incremental output mode. Maximum speed of 6000rmp, output resolution of 17 bits, the temperature range: -30 °C ~ 85 °C, small size, anti-pollution ability, high precision. It can be used in servo control system, robot arm, position measurement, industrial automation control, DC motor and other fields.

电气连接Electrical Connection

	红色 RED	黑色 BLACK	绿色 GREEN	白色 WHITE	屏蔽层 SHIELDING LAYER
接线定义 wiring definition	DC12V~DC24V (电压/电流/RS485) DC12V~DC24V (voltage/current/RS485)	电源负 power negative GND	D+/OUT+ RS485-A/OUT+	D-/OUT- RS485-B/OUT-	接外壳 connecting shell

性能参数Performance Parameters

电气指标Electrical indicators

型号 Model number	WOA-A
分辨率 Resolution	17位 17th
输出信号 Output signal	0-5V / 0-10V / 4-20mA / RS485
允许旋转速度 Allowable rotation speed	≤6000rpm
线性精度 Linear accuracy	模拟量精度:≤0.2°;数字量精度:≤0.02° analog precision: ≤0.2°; digital precision: ≤0.02°
Bit顺序 Bit order	LSB First
通信速率 Communications rate	9600bps(默认) 9600bps (default)
工作环境温度 Working environment temperature	-30°C~85°C
可标定圈数范围 Range of calibratable turns	1-32767圈(范围内可任意标定) 1-32767 revolutions (range can be arbitrarily calibrated)
传送方式 Delivery method	半双工串行通信(RS485) half-duplex serial communication (RS485)
传送错误校验 Transmission error check	CRC校验(CRC多项式CRC16+1) CRC checksum (CRC polynomial CRC16+1)
电源电压 Supply voltage	DC12V~DC24V(电压/电流/RS485)波动5%以下 DC12V~DC24V (voltage/current/RS485) fluctuation 5% or less
同步方式 Synchronization	起止同步(8bit数据、1bit停止) start-stop synchronization (8bit data, 1bit stop)
输入输出形态 Input/output forms	差分线路驱动器/接收器 differential line driver/receiver
电源电压VCC 消耗电流 Supply voltage VCC current consumption	40mA不含突发情况 40mA without contingency

注:电源打开后因内部电路的初期化,请在上电50msec后,再输入命令。BAT电压小于2.8V时,多圈数据会清零。

Note: Please input the command after 50msec of power-on due to the initialization of the internal circuit after the power is turned on. multi-turn data will be cleared when the BAT voltage is less than 2.8V.

产品型号选型Product Model Selection

WOA - □ - □ - □□

米朗科技角度尺
Miran technology angle ruler

A:圆形磁感应电子仓
A: circular magnetic induction electronic compartment

1-32767圈可选
1-32767 turns available

V1:0-5V输出
V1: 0-5V output

V2:0-10V输出
V2: 0-10V output

A:4-20mA输出
A: 4-20mA output

R:RS485输出
R: RS485 output

例如Example:

WOA-A-5-V1:代表米朗磁感应角度尺,5圈,0-5V信号输出
WOA-A-5-V1: stands for miran magnetic induction angle ruler, 5-turn, 0-5V signal output

WOA-A-32767-R:代表米朗磁感应角度尺,最大32767圈,RS485信号输出
WOA-A-32767-R: stands for miran magnetic induction angle ruler ,up to 32767 turns , RS485 signal output.

单圈为绝对值输出模式,多圈为增量型输出模式,增量型输出模式下BAT电压小于2.8V时,多圈数据会清零
Single-turn is absolute output mode, multi-turn is incremental output mode, and multi-turn data will be cleared to zero when BAT voltage is less than 2.8V in incremental output mode.

产品尺寸图Product Dimension Drawing

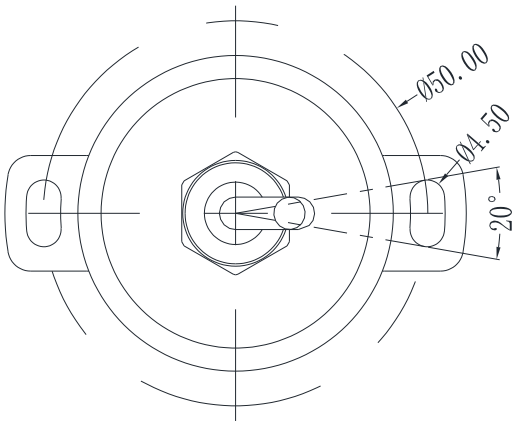



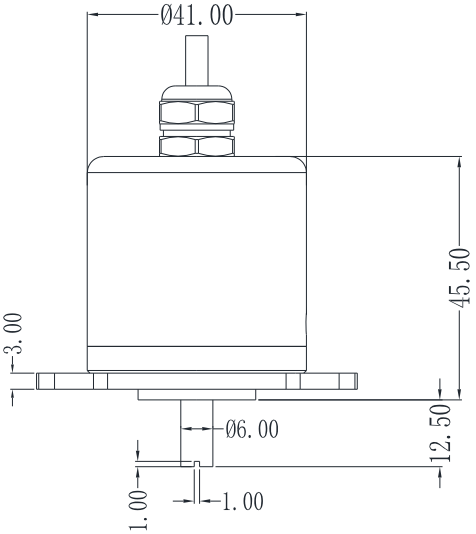

WOA-R系列多圈角度传感器
WOA-R Series Multi-circle Openness Sensor

产品实物图Product Picture







产品概述Product Overview

WOA-R系列磁感应编码器为测量电机旋转位置的非接触式编码器，产品为米朗科技自主研发的磁感应多圈传感器，并加入信号调理及算法，计算角度。WOA-R系列角度传感器支持RS485信号输出，单圈为绝对值输出模式，多圈为增量型输出模式，增量型输出模式下BAT电压小于2.8V时，多圈数据会清零。最大转速6000rmp，输出分辨率为17位，温度范围：-30℃～85℃，体积小，抗污染能力强，精度高。可应用于伺服控制系统、机器手臂、位置测量、工业自动化控制，直流电机等领域。

WOA-R series magnetic induction encoder is a non-contact encoder to measure the rotary position of motor, which is developed by miran Technology independently. The product is a magnetic induction multi-turn sensor developed by miran Technology, with signal conditioning and algorithm to calculate the angle. WOA-R series angle sensors supports RS485 signal output, Single-turn is absolute output mode, multi-turn is incremental output mode, and multi-turn data will be cleared to zero when BAT voltage is less than 2.8V in incremental output mode. maximum speed of 6000rmp, output resolution of 17 bits, the temperature range: -30 °C ~ 85 °C, small size, anti-pollution ability, high precision. It can be used in servo control system, robot arm, position measurement, industrial automation control, DC motor and other fields.

电气连接Electrical Connection

	红色 RED	黑色 BLACK	绿色 GREEN	白色 WHITE	屏蔽层 SHIELDING LAYER
接线定义 wiring definition	电源正VCC power positive DC 5V	电源负 power negative GND	RS485-A	RS485-B	接外壳 connecting shell

性能参数Performance Parameters

电气指标Electrical indicators

型号 Model number	WOA-R
分辨率 Resolution	17位 17th
输出信号 Output signal	RS485
允许旋转速度 Allowable rotation speed	⩽6000rpm
线性精度 Linear accuracy	⩽0.02°
Bit顺序 Bit order	LSB First
通信速率 Communications rate	9600bps（默认） 9600bps (default)
工作环境温度 Working environment temperature	-30°C~85°C
可标定圈数范围 Range of calibratable turns	1-32767圈（范围内可任意标定） 1-32767 revolutions (range can be arbitrarily calibrated)
传送方式 Delivery method	半双工串行通信（RS485） half-duplex serial communication (RS485)
传送错误校验 Transmission error check	CRC校验（CRC多项式CRC16+1） CRC checksum (CRC polynomial CRC16+1)
电源电压 Supply voltage	DC 5V（RS485）
同步方式 Synchronization	起止同步（8bit数据、1bit停止） start-stop synchronization (8bit data, 1bit stop)
输入输出形态 Input/output forms	差分线路驱动器/接收器 differential line driver/receiver
电源电压VCC 消耗电流 Supply voltage VCC current consumption	40mA不含突发情况 40mA without contingency

注：电源打开后因内部电路的初期化，请在上电50msec后，再输入命令。BAT电压小于2.8V时，多圈数据会清零。

Note: Please input the command after 50msec of power-on due to the initialization of the internal circuit after the power is turned on. multi-turn data will be cleared when the BAT voltage is less than 2.8V.

产品型号选型Product Model Selection

WOA - □ - □ - □□

米朗科技角度尺 Miran technology angle ruler	R:圆形磁感应电子仓 R: circular magnetic induction electronic compartment	1-32767圈可选 1-32767 turns available	R:RS485输出(DC5V供电) R: RS485 output (DC5V power supply)

例如Example:

WOA-R-32767-R:代表米朗圆形磁感应角度尺,最大测量圈数为32767圈,RS485信号输出(DC5V供电)

WOA-R-32767-R: representative circular magnetic inductive ruler with up to 32,767 measuring turns, RS485 signal output (DC5V power supply)

注:单圈为绝对值输出模式,多圈为增量型输出模式,增量型输出模式下BAT电压小于2.8V时,多圈数据会清零

Note: single-turn is absolute output mode, multi-turn is incremental output mode, and multi-turn data will be cleared to zero when BAT voltage is less than 2.8V in incremental output mode.

产品尺寸图Product Dimension Drawing

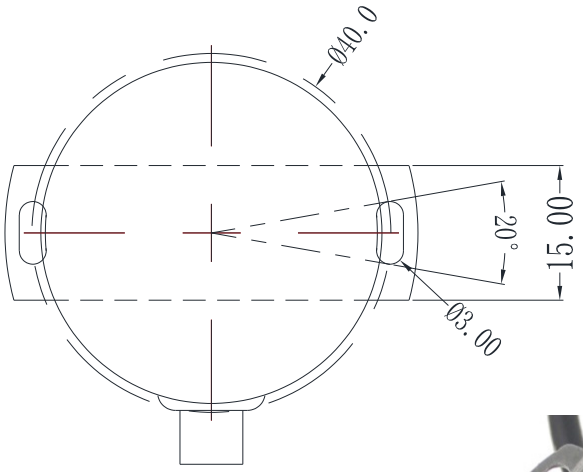

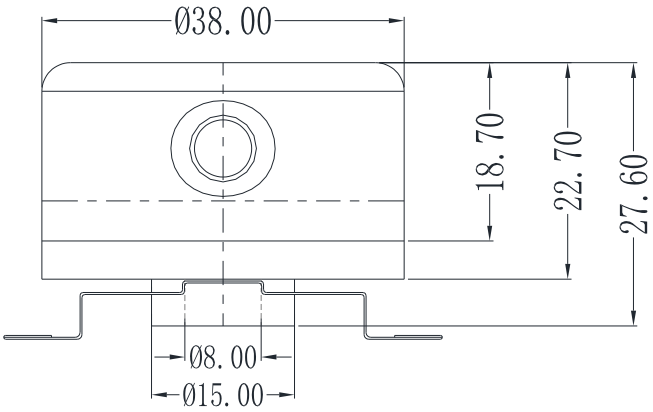



WOA-D系列防水型多圈角度传感器
WOA-D Series Watertight Multiturn Sensors

产品实物图Product Picture







产品概述Product Overview

WOA-D系列防水型磁电编码器为测量电机旋转位置的内部非接触式绝对值编码器，产品采用米朗科技自主研发的的磁感应多圈传感器，并加入信号调理及算法，计算绝对角度，可在水下100米里长期正常工作。

WOA-D系列防水型传感器体积小，抗污染能力强，绝对值输出，数据掉电记忆，防护等级IP68。可应用于伺服控制系统、机器手臂、位置测量、工业自动化控制、直流电机等领域。

WOA-D series waterproof magnetic encoder is an internal non-contact absolute encoder for measuring the rotary position of motor, the product adopts the magnetic induction multi-turn sensor independently developed by Miran Technology and adds signal conditioning and algorithms to calculate the absolute angle, which can be used for long time and normal work in 100 meters underwater.

WOA-D series waterproof sensors have small size, strong anti-pollution ability, absolute value output, data power-down memory, and IP68 protection level, which can be used in servo control system, robot arm, position measurement, industrial automation control, DC motor and other fields.

性能参数Performance Parameters

电气指标Electrical indicators

旋转方向 Direction of rotation	顺时针/逆时针 clockwise/counterclockwise
防护等级 Protection class	IP68
响应频率 Response frequency	100Hz
允许旋转速度 Allowable rotation speed	⩽600rpm
电源电压 Supply voltage	+12~24VDC
分辨率 Resolution	0.09°
线性精度 Linear accuracy	⩽0.2%FS
输出信号 Output signal	模拟量信号输出:0~5V/0~10V/4~20mA; 数字量信号输出:RS485 analog signal output: 0~5V/0~10V/4~20mA; digital signal output: RS485
可标定圈数范围 Range of calibratable turns	模拟量信号输出:1~40圈; 数字量信号输出:1~4080圈 analog signal output: 1~40 turns; digital signal output: 1~4080 turns
工作环境温度 Working environment temperature	-10°C~60°C (低温状态下,需保持无结晶状态) -10°C~60°C (at low temperature, need to keep no crystallization)

注:电源打开后因内部电路的初期化,请在上电50msec后,再输入命令。每次断电与上电保持间隔大于10秒。

Note: Please enter the command after 50msec of power-on due to initialization of internal circuitry after the power is turned on. Keep the interval between each power-off and power-on more than 10 seconds.

电气连接Electrical Connection

	红色 RED	黑色 BLACK	绿色 GREEN	白色 WHITE	屏蔽线SHIELDED WIRE
接线定义 wiring definition	电源正VCC power positive VCC +12V~24VDC	电源负GND power negative GND 0V	RS485-A/OUT+ 信号输出 signal output	RS485-B/OUT- 信号输出 signal output	接外壳 connecting shell 接地 grounding

产品型号选型Product Model Selection

WOA - □ - □ - □□ - □□

- WOA：角度传感器 angle sensor
- □：D：圆形磁感应专用电子仓 D: round magnetic induction special electronic compartment
- □：1-4080圈可选 1-4080 turns available
- □□：V1：0-5V输出 V1: 0-5V output；V2：0-10V输出 V2: 0-10V output；A：4-20mA输出 A: 4-20mA output；R：RS485输出 R: RS485 output
- □□：DL：尾部直出线 DL: tail straight out line；SL：尾部侧出线 SL: tail side exit wire

注：所选圈数要能够被4080整除，不能有余数。举例如下：

4080/圈数=4080/3=1360，圈数3可选；

4080/圈数=4080/7=582.8，圈数7不可选。

Note: The number of selected laps must be divisible by 4080, and there must be no remainder. For example:

4080/number of laps=4080/3=1360, number of laps 3 optional;

4080/number of laps=4080/7=582.8, the number of laps 7 is not selectable.

选型举例Example of selection：

WOA-D-5-V1-SL：代表磁感应角度尺，5圈，0-5V输出，侧出线。

WOA-D-5-V1-SL: represents magnetic induction angle ruler, 5-turn, 0-5V output, side exit wires.

产品尺寸图Product Dimension Drawing

WOA-D直出线WOA-D straight outlet

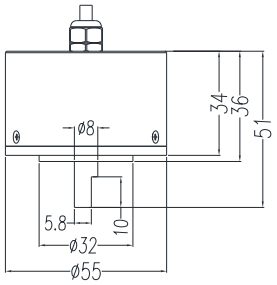



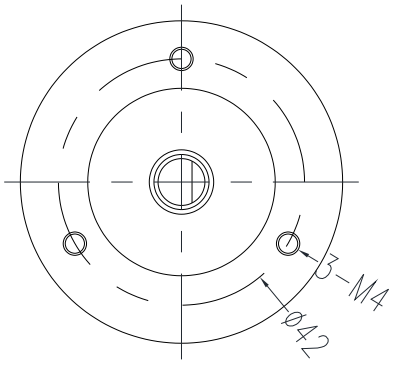

WOA-D侧出线WOA-D side outlet

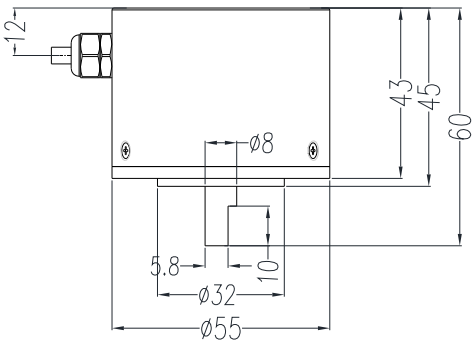



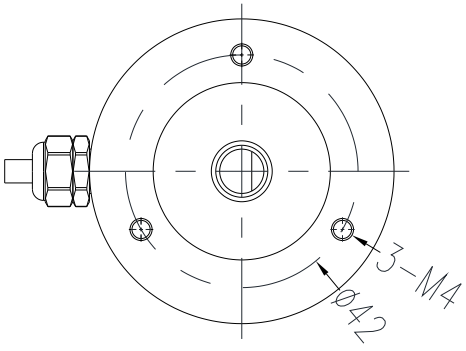

WOA-D2系列双输出型多圈角度传感器
WOA-D2 Series Dual Output Multi-circle Sensor

产品实物图Product Picture





产品概述Product Overview

WOA-D2系列磁感应编码器为测量电机旋转位置的内部非接触式绝对值编码器，产品为米朗科技自主研发的磁感应多圈传感器，并加入信号调理及算法，计算绝对角度，可同时输出模拟量信号与数字量信号。

WOA-D2双输出型磁感应多圈角度传感器支持多种信号输出（RS485半双工通信，4-20mA，0-5V，0-10V），最大转速600rmp，体积小，抗污染能力强，绝对值输出，数据掉电记忆，可应用于伺服控制系统、机器手臂、位置测量、工业自动化控制、直流电机等领域。

WOA-D2 series magnetic induction encoder is an internal non-contact absolute encoder to measure the rotary position of the motor. The product is a magnetic induction multi-turn sensor independently developed by Miran Technology, with signal conditioning and algorithms to calculate the absolute angle, and it can output analog signals and digital signals at the same time.

WOA-D2 dual output magnetic induction multi-turn angle sensor supports a variety of signal output (RS485 half-duplex communication, 4-20mA, 0-5V, 0-10V), maximum speed 600rmp, small size, strong anti-pollution ability, absolute value output, data power-down memory, can be applied to servo control system, robot arm, position measurement, industrial automation control, DC motors and other fields.

性能参数Performance Parameters

电气指标Electrical indicators

旋转方向 Direction of rotation	顺时针/逆时针 clockwise/counterclockwise
防护等级 Protection class	IP68
响应频率 Response frequency	100Hz
允许旋转速度 Allowable rotation speed	⩽600rpm
电源电压 Supply voltage	+12~24VDC
分辨率 Resolution	模拟量信号输出:16位; 数字量信号输出:单圈12位 analog signal output: 16 bits; digital signal output: single-turn 12 bits
线性精度 Linear accuracy	⩽0.05%FS
输出信号 Output signal	模拟量信号输出:0~5V/0~10V/4~20mA; 数字量信号输出:RS485, SSI analog signal output: 0~5V/0~10V/4~20mA; digital signal output: RS485, SSI
可标定圈数范围 Range of calibratable turns	模拟量信号输出:1~40圈; 数字量信号输出:1~4080圈 analog signal output: 1~40 turns; digital signal output: 1~4080 turns
工作环境温度 Working environment temperature	-10°C~60°C (低温状态下,需保持无结晶状态) -10°C~60°C (at low temperature, need to keep no crystallization)

注:①模拟量输出选择较大圈数后,分辨率也会随之变差。②电源打开后因内部电路的初期化,请在上电50msec后,再输入命令。每次断电与上电保持间隔大于10秒。

Note: ①Resolution deteriorates when a larger number of turns is selected for analog output. ②The internal circuitry is initialized after the power is turned on, so enter the command after 50msec of power-on. The interval between each power-off and power-on should be more than 10 seconds.

电气连接Electrical Connection

接线定义 wiring definition	红色 RED	黑色 BLACK	绿色 GREEN	白色 WHITE	黄色 YELLOW	屏蔽线SHIELDED WIRE
	电源正VCC power positive VCC +12V~24VDC	电源负GND power negative GND 0V	RS485-A/OUT+ 信号输出 signal output	RS485-B/OUT- 信号输出 signal output	4-20mA/0-5V/0-10V 模拟量信号输出 analog signal output	接外壳 connecting shell 接地 grounding

产品型号选型Product Model Selection

WOA - □ - □ - □/□

- WOA：角度传感器 angle sensor
- □：D2：磁感应双输出专用电子仓 D2: magnetic induction dual output specialized electronic compartment
- □：1-4080圈可选 1-4080 turns available
- □：V1：0-5V输出 V1: 0-5V output；V2：0-10V输出 V2: 0-10V output；A：4-20mA输出 A: 4-20mA output；R：RS485输出 R: RS485 output

注：所选圈数要能够被4080整除，不能有余数。举例如下：
4080/圈数=4080/3=1360，圈数3可选；
4080/圈数=4080/7=582.8，圈数7不可选。

Note: The number of selected laps must be divisible by 4080, and there must be no remainder. For example:
4080/number of laps=4080/3=1360, number of laps 3 optional;
4080/number of laps=4080/7=582.8, the number of laps 7 is not selectable.

选型举例Example of selection：

WOA-D2-10-A/R：表示米朗磁感应角度尺，10圈，可同时输出4-20mA电流信号与RS485信号（只可同时输出两种不同的信号）

WOA-D2-10-A/R: indicates that the miran magnetic induction angle ruler ,10 turns, can simultaneously output 4-20mA current signal and RS485 signal (only two different signals can be output at the same time).

产品尺寸图Product Dimension Drawing

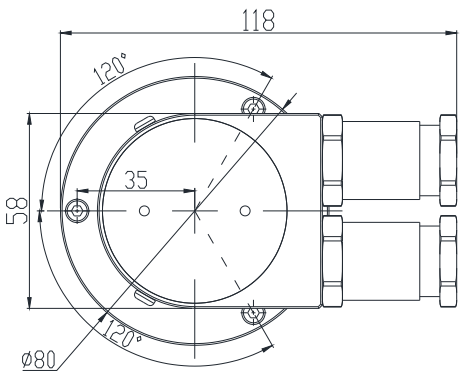



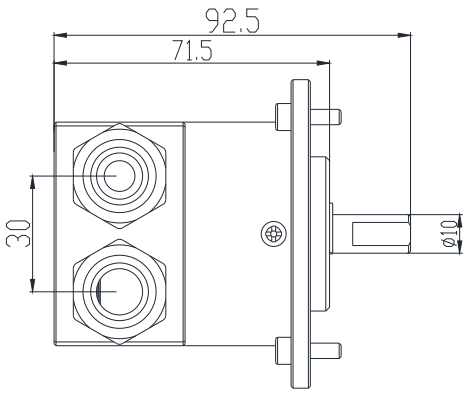

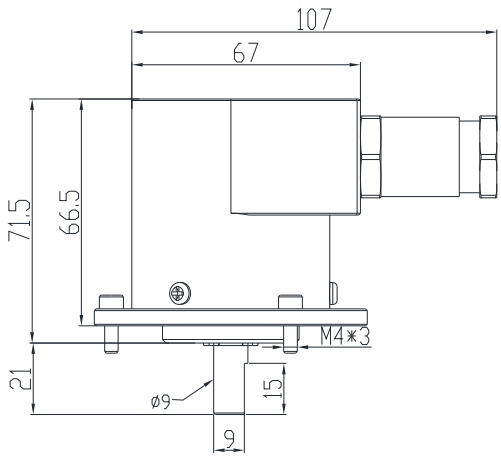



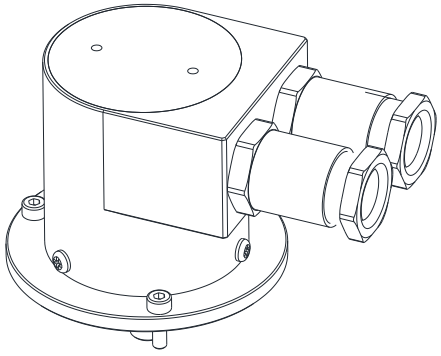

MFB-MPSFS2系列防水防爆型多圈角度传感器
MFB-MPSFS2 series watertight explosion-proof multi-circle sensors

产品实物图Product Picture







产品概述Product Overview

MFB-MPSFS2防水防爆系列磁感应编码器为测量电机旋转位置的内部非接触式绝对值编码器，产品为米朗科技自主研发的磁感应多圈传感器，并加入信号调理及算法，计算绝对角度，可在水下长期正常工作。

MFB-MPSFS2防水防爆型传感器体积小，抗污染能力强，绝对值输出，数据掉电记忆，防护等级为IP68。信号输出：RS485半双工通信、4-20mA、0-5V、0-10V，支持max转速600rmp。可应用于伺服控制系统、机器手臂、位置测量、工业自动化控制，直流电机等领域。

MFB-MPSFS2 waterproof and explosion-proof series magnetic induction encoder is an internal non-contact absolute encoder for measuring the rotary position of motor, the product is a magnetic induction multi-turn sensor independently developed by Miran Technology, and add signal conditioning and algorithms to calculate the absolute angle, which can work properly for a long time under water. Underwater for a long time normal work.

MFB-MPSFS2 waterproof and explosion-proof sensor is small in size, anti-pollution ability, absolute value output, data power-down memory, protection grade IP68. Signal output: RS485 half-duplex communication, 4-20mA, 0-5V, 0-10V, support max speed of 600rmp. it can be applied in servo control system, robot arm, position measurement, industrial automation control DC motors and other fields.

性能参数Performance Parameters

电气指标Electrical indicators

型号 Model number	MFB-MPSFS2
电源电压 Supply voltage	+12~24VDC
分辨率 Resolution	0.09°
线性精度 Linear accuracy	⩽0.2%FS
旋转方向 Direction of rotation	顺时针/逆时针 clockwise/counterclockwise
响应频率 Response frequency	100Hz
允许旋转速度 Allowable rotation speed	⩽600rpm
防护等级 Protection class	IP68
防爆等级 Explosion-proof grade	Ex db IIC T6 Gb
输出信号 Output signal	模拟量信号输出:0~5V/0~10V/4~20mA; 数字量信号输出:RS485 analog signal output: 0~5V/0~10V/4~20mA; digital signal output: RS485
可标定圈数范围 Range of calibratable turns	模拟量信号输出:1~40圈; 数字量信号输出:1~4080圈 analog signal output: 1~40 turns; digital signal output: 1~4080 turns
工作环境温度 Working environment temperature	-10°C~60°C (低温状态下,需保持无结晶状态) -10°C~60°C (at low temperature, need to keep no crystallization)

注:电源打开后因内部电路的初期化,请在上电50msec后,再输入命令。每次断电与上电保持间隔大于10秒。
Note: Please enter the command after 50msec of power-on due to initialization of internal circuitry after the power is turned on. Keep the interval between each power-off and power-on more than 10 seconds.

电气连接Electrical Connection

模拟量接线定义 analog wiring definition	红色 RED 电源正 power positive DC12~24V	黑色 BLACK 电源负 power negative 0V	绿色 GREEN 输出 output 4-20mA	屏蔽线SHIELDED WIRE 接大地 grounding GND

数字量接线定义 digital wiring definition	红色 RED 电源正VCC power positive VCC +12V~24VDC	黑色 BLACK 电源负GND power negative GND 0V	绿色 GREEN RS485-A	白色 WHITE RS485-B	屏蔽线SHIELDED WIRE 接外壳 connecting shell 接大地 grounding

产品型号选型Product Model Selection

MFB - MPSFS2 - □ - □□ - EX

MFB	MPSFS2	□	□□	EX
米朗科技防爆系列 Miran technology explosion-proof series	防水防爆角度传感器 Waterproof explosion-proof angle sensor	1-4080圈可选 1-4080 turns available	V1：0-5V输出 V1: 0-5V output V2：0-10V输出 V2: 0-10V output A：4-20mA输出 A: 4-20mA output R：RS485输出 R: RS485 output	防爆标志 Explosion-proof symbol

注：所选圈数要能够被4080整除，不能有余数。举例如下：
4080/圈数=4080/3=1360，圈数3可选；
4080/圈数=4080/7=582.8，圈数7不可选。
Note: The number of selected laps must be divisible by 4080, and there must be no remainder. For example:
4080/number of laps=4080/3=1360, number of laps 3 optional;
4080/number of laps=4080/7=582.8, the number of laps 7 is not selectable.

选型举例Example of selection：

MFB-MPSFS2-4080-R-EX：表示米朗防水防爆角度传感器，最大4080圈，RS485信号输出。
MFB-MPSFS2-4080-R-EX: miran waterproof explosion-proof angle sensor, maximum 4080 turns, RS485 signal output.
MFB-MPSFS2-5-V1-EX：表示米朗防水防爆角度传感器，5圈，0-5V信号输出。
MFB-MPSFS2-5-V1-EX: indicates the waterproof and explosion-proof angle sensor of miran, 5 turns, 0-5V signal output.

产品尺寸图Product Dimension Drawing

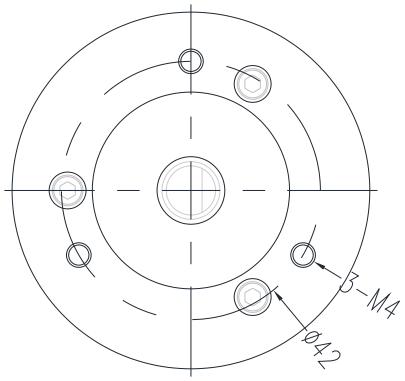

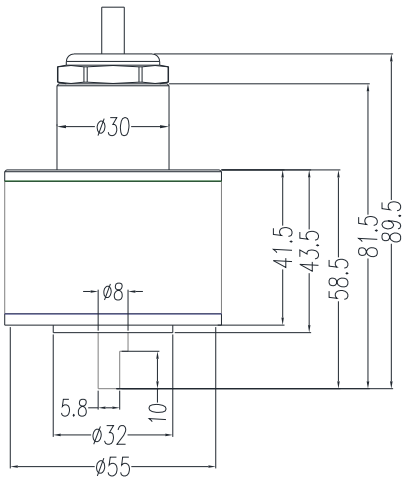

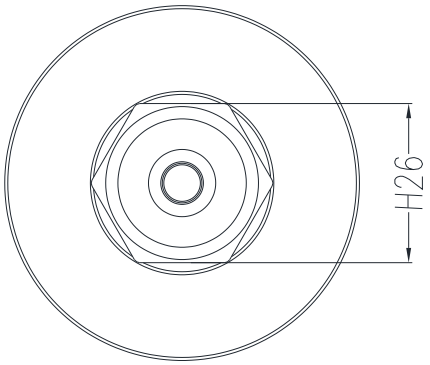



防爆合格证Explosion-proof Certificate



CNEX 国家防爆

编号：CNEx22.5301

防爆合格证

制造单位	枣阳市米朗科技有限公司 地址：湖北省枣阳市南城霍庄村八组
产品名称	拉绳位移传感器
型号规格	MFB-MPSFS2　　24VDC
防爆标志	Ex db IIC T6 Gb
产品标准	Q/ MLKJ02 -2022
总装图号	MFB-MPSFS2.00

经对上述产品图样及技术文件的审查和样品检验,确认符合下列标准：
GB/T3836.1-2021 《爆炸性环境 第 1 部分：设备 通用要求》
GB/T3836.2-2021 《爆炸性环境 第 2 部分：由隔爆外壳“d”保护的设备》

记事:
1.使用环境温度：-20℃～+60℃。
2.外壳防护等级：IP68(1m/2h)。

中心主任

颁发日期　2022年11月02日

本证有效期　2022年11月02日至2027年11月01日

Ex CQST

南阳防爆电气研究所
国家防爆电气产品质量检验检测中心

公众号

注：本证书仅对与认可文件和样品一致的产品有效。登录网站或关注公众号查询真伪　2559 9476 0664 5902
地址：中国河南省南阳市仲景北路20号
邮编：473008　电话：0377-63258564 传真：0377-63208175 网址：www.china-ex.com

应用领域Areas of application



• 铁路机车监测
Railroad locomotive monitoring



• 建筑健康监测
Building health monitoring



• 塔杆倾斜监测
Tower tilt monitoring

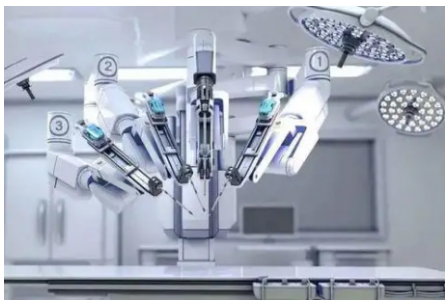

• 工业自动化姿态控制
Industrial automation attitude control

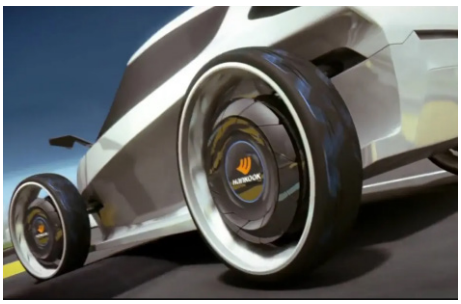

• 汽车轮胎角度测量
Car tire angle measurement



• 桥梁与大坝监测
Bridge and dam monitoring



• 石油钻井设备
Oil drilling equipment

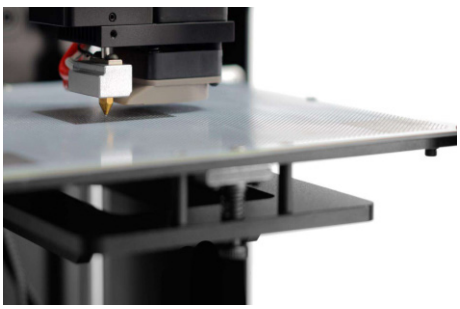

• 精密平台自动调平
Precision platform with automatic leveling

• • •

角度位置传感器应用场所极多，随着核心技术的发展，角度传感器得到越来越广泛的应用。
Angle position sensors are used in an extremely wide range of applications, and with the development of core technologies, angle sensors are becoming more and more widely used.

适合应用于工厂、山体、铁路、隧道、船业、机械、建筑业、医疗事业、桥梁铺设、水坝建设、汽车行业、核工业和航空航天事业等。
Suitable for applications in factories, mountains, railroads, tunnels, shipping, machinery, construction, medical business, bridge laying, dam construction, automotive industry, nuclear industry and aerospace business.



辐射全国 放眼世界

Radiate to the whole country and see the world

质量第一 Quality First

用户至上 Customer First

诚信为本 Credit First

本彩页内产品尺寸，性能等参数仅作为参考，随着产品的不断更新换代，或可能有所调整改变，恕不另行通知，最终尺寸要以产品实物为准。实际产品尺寸和性能参数等，需要在实际购买的时候，与我司业务或者技术人员沟通确认最终数据，以最终书面确认的尺寸和数据为准。

（尤其是在尺寸方面要求特别严格的，或者在产品实物没收到之前，就要先在自己设备上加工做好安装孔位和确定安装空间位置的，要特别注意,要在购买前3天内与我们书面再次确认好产品的实际尺寸，以免造成不必要的返工等损失，若没有在购买前3天内与我们书面确认尺寸而造成后续安装困难等损失，我司不予承担，最终尺寸要以产品实物为准。）

将致力于位移、物位、角度等测控领域

Will be committed to the field of displacement, level, angle measurement and control

为客户提供一站式解决方案的产品与服务

Products and services that provide one-stop solutions for our customers

版权归深圳市米朗科技有限公司所有
Copyright © Shenzhen Miran Technology Co

本选型样本如有变动，恕不另行通知，以最新版本为准
This catalog is subject to change without notice and the latest version shall prevail

任何拷贝、复制、拍摄制作为商业用途均属于侵权
Any copying, reproduction, filming or production for commercial use is an infringement of copyright

20261001-角度位移传感器彩页
20261001 - Angle displacement sensor brochure

主要著作人：王工
Main author: Wang designer

2026年10月出品
Produced in October 2026