Technical Specification

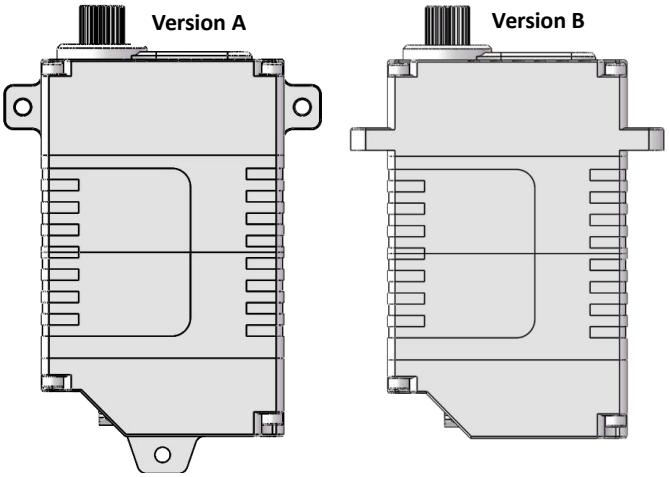

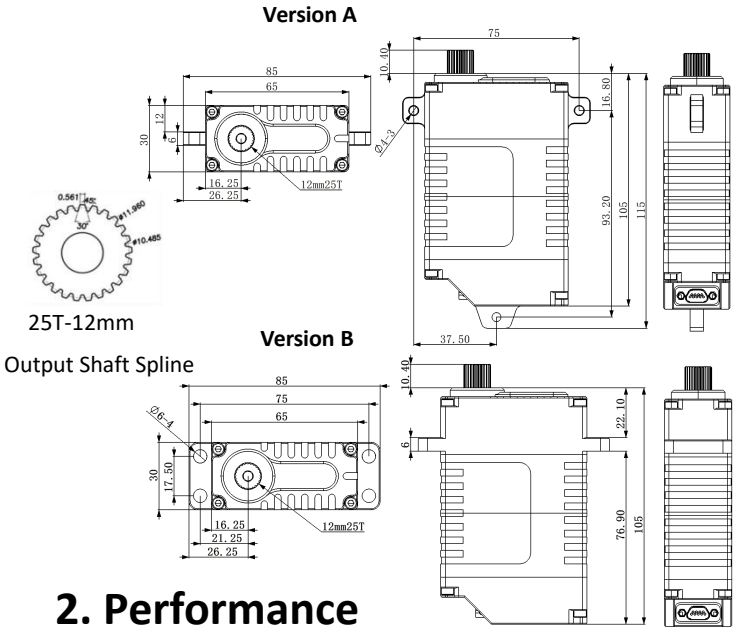

1. Operating Data

Rated Voltage	DC30V
Voltage Range	DC20V-32V
No-load current	50mA
Stalling Torque	200Kgf.cm
No load speed	260°/sec
Rated Speed	170°/sec
Stalling Current	6.8A
Rated Torque	100Kgf.cm
Rated Current	4.5A
Working Frequency	1520us/333Hz
Pulse Width	500us-2500us
Temperature Range	-30℃.....+65℃
Default Travel Angle	±100°=200° Total angle
Gear Backlash	≤0.5°
Command Signal	PWM/CANOPEN 2.0B
Dimensions	65*30*105mm(±0.5mm)
Weight	450g±10%
Case Material	Aluminum Alloy
Motor Type	Brushless DC Motor
Gear Set Material	Hardened Steel
Position Sensor:	Contactless
Ball Bearing:	6BB
Shielded Connecting Cable	J30JA-9TJL

2. Performance

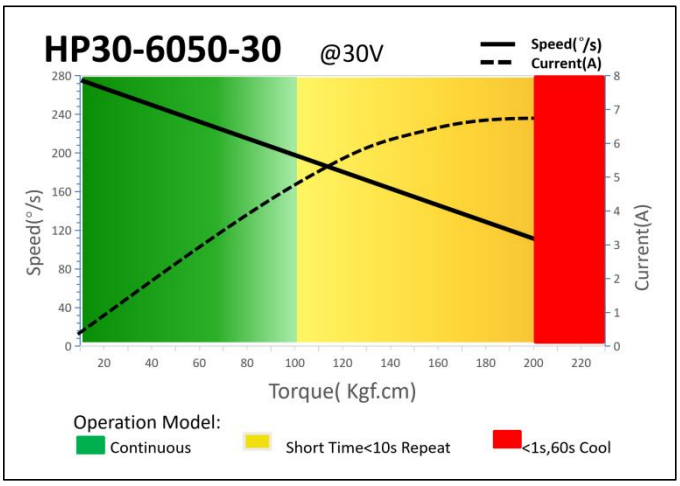

3. Command Signal

3.1 PWM Command Interface

Signal Voltage	HIGH: min.3.3V, max.5.0V Low: min.0.0V, max.1.5V
Pulse Width	500us-2500us
Pulse Width for Position	1000us/1500us/2000us -50°/ 0°/+50°

3.2 CAN Bus Command Interface

Baud-Rate	500Kbps
Node number	0 x25 (range 1 ~ 127, 0 is radio)
Communication	CAN Open

3.3 Position Feedback Signal

3.3.1 PWM Feedback

The Position Feedback signal (Pos FB) is an analog output signal with a voltage value which is directly related to the output shaft's angular position. Reference is **FB -** .

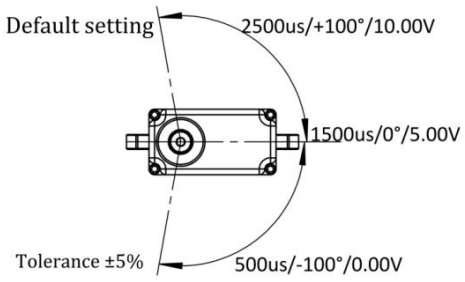

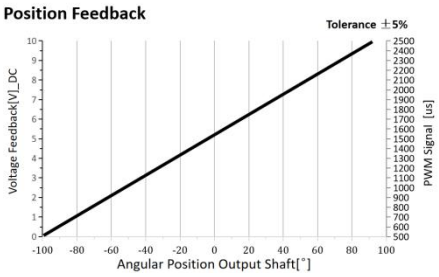

3.3.2 CANBUS Feedback

Integrated in the Bus protocol a Feedback Value, including the Angle position, Temperature, current value. Value read by sending request command. Provide the details of the bus in the document.

4. Electrical Connection

J30JA-9ZK	Pin	Description
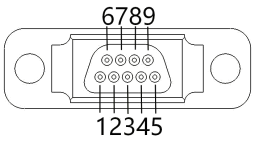	1	DC + Supply Voltage
	2	
	3	DC- Supply Ground
	4	
	5	PWM Command Signal
	6	FB +
	7	FB -
	8	CAN_H
	9	CAN_L

5.Accessories: Aluminum Servo Horn , Item No.： 1225.50

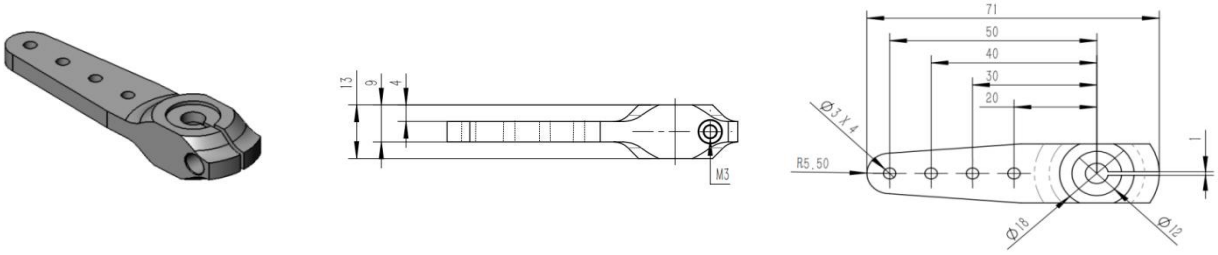

6. Item Number System

HP 30 - 6050 - 30 - *

- HP 30: High Power, 30mm Class
- 6050: Servo Type
- 30: DC30V
- *: Command

Command:

1:PWM	5:PWM+CAN Bus
2:RS485	7:Custom
3:CAN Bus	10:RS485+CAN Bus