Technical Specification

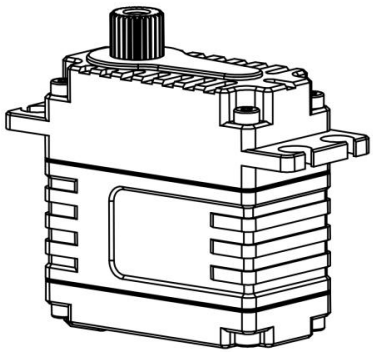

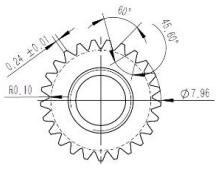

25T-8mm
Output Shaft Spline

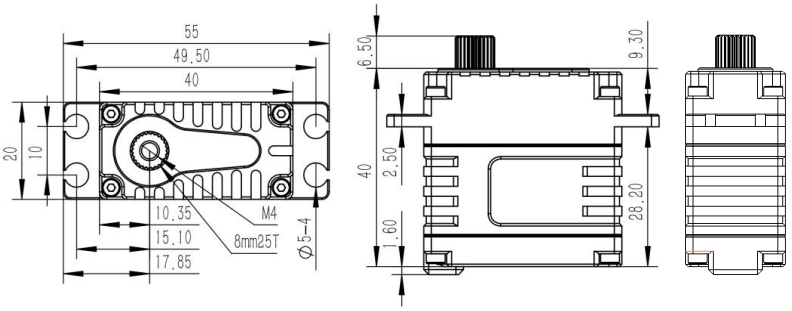

1. Operating Data

Rated Voltage	DC7.4V
Voltage Range	DC6V-9V
No-load current	55mA
Stalling Torque	45Kgf.cm
No load speed	450°/sec
Rated Speed	300°/sec
Stalling Current	8.5A
Rated Torque	20Kgf.cm
Rated Current	3.8A
Working Frequency	1520us/333Hz
Pulse Width	500us-2500us
Temperature Range	-30℃.....+65℃
Default Travel Angle	±100°=200° Total angle
Gear Backlash	≤0.5°
Command Signal	PWM
Dimensions	40mm*20mm*40mm(±0.2mm)
Weight	80g±10%
Case Material	Aluminum Alloy
Motor Type	Brushless DC Motor
Gear Set Material	Hardened Steel
Position Sensor:	Contactless
Ball Bearing:	6BB

2. Performance

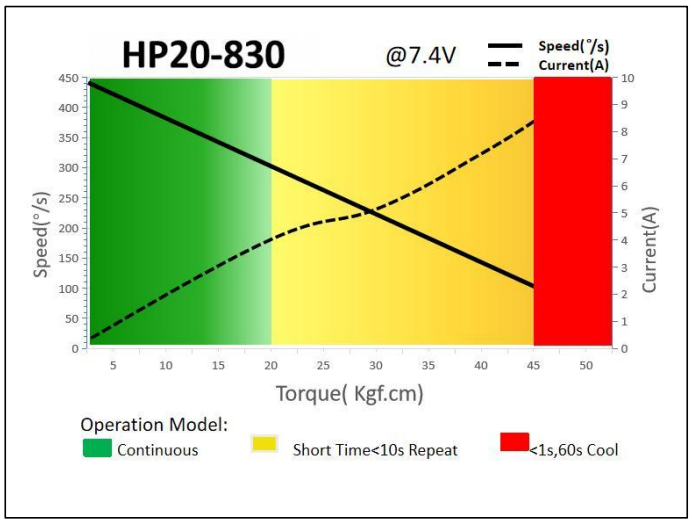

3.Command Signal

3.1 PWM Command Interface

Signal Voltage	HIGH: min.3.3V, max.5.0V Low: min.0.0V, max.1.5V
Pulse Width	500us-2500us
Pulse Width for Position	1000us/1500us/2000us -50°/ 0°/+50°

3.2 PWM Position Feedback Signal

The Position Feedback signal (Pos FB) is an analog output signal with a voltage value which is directly related to the output shaft's angular position. Reference is **FB -** .

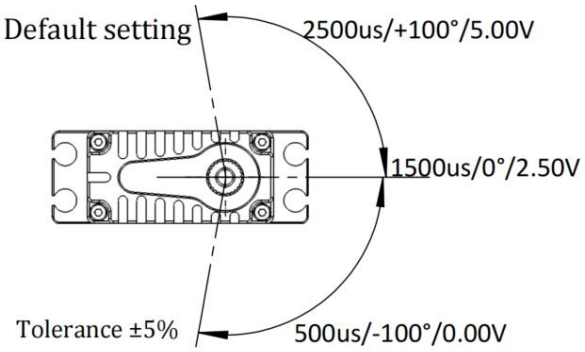

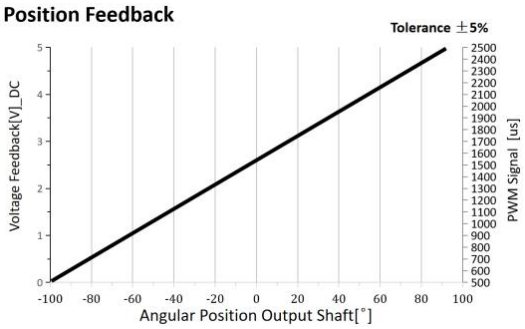

4. Electrical Connection (Leads length=300mm)

PWM Connection	Pin Assignment			
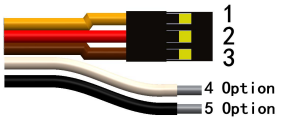	1	Orange	SIG	Command Signal
	2	Red	DC+	Supply Voltage
	3	Brown	DC-	Supply Ground
	4	White	FB +	Feedback Signal （Option）
	5	Black	FB -	Feedback Signal Ground （Option）

5.Accessories: Aluminum Servo Horn , Item No.： 0825.38

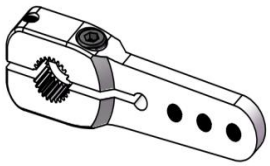

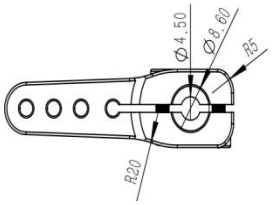

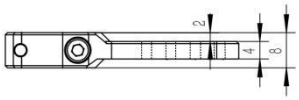

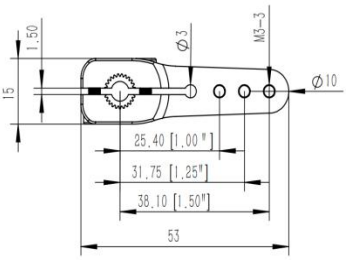

6. Item Number System

HP 20 - 830

- HP 20: High Power, 20mm Class
- 830: Servo Type