Technical Specification

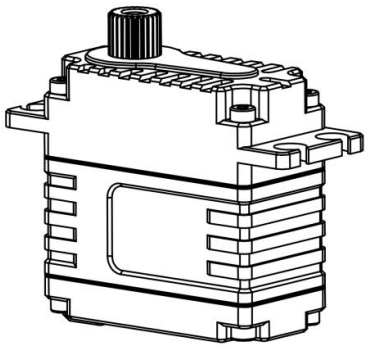

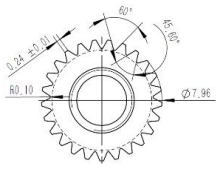

25T-8mm
Output Shaft Spline

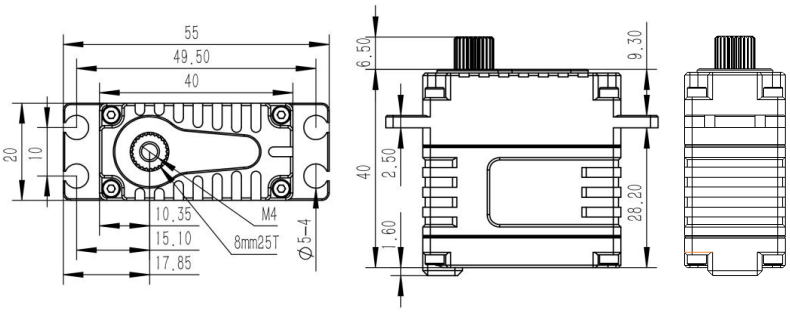

1. Operating Data

Rated Voltage	DC24V
Voltage Range	DC20V-26V
No-load current	50mA
Stalling Torque	32Kgf.cm
No load speed	500°/sec
Rated Speed	320°/sec
Stalling Current	2.6A
Rated Torque	16Kgf.cm
Rated Current	1.6A
Working Frequency	1520us/333Hz
Pulse Width	500us-2500us
Temperature Range	-30℃.....+65℃
Default Travel Angle	±100°=200° Total angle
Gear Backlash	≤0.5°
Command Signal	PWM or CANOPEN 2.0B
Dimensions	40mm*20mm*40mm(±0.2mm)
Weight	80g±10%
Case Material	Aluminum Alloy
Motor Type	Brushless DC Motor
Gear Set Material	Hardened Steel
Position Sensor:	Contactless
Ball Bearing:	2BB

2. Performance

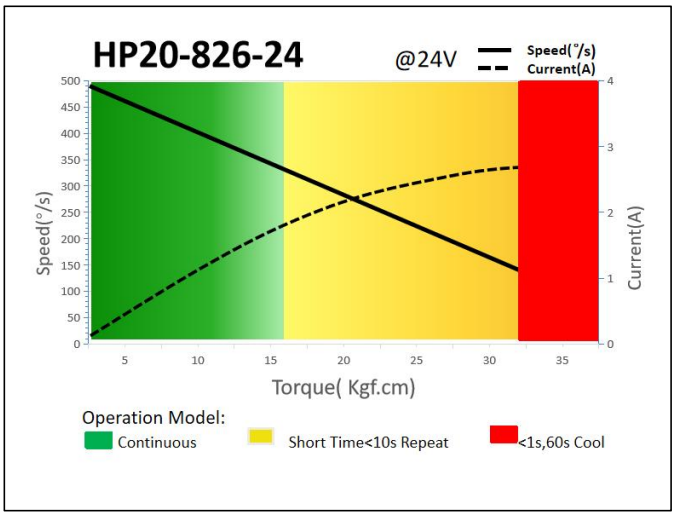

3.Command Signal

PWM or CANOPEN 2.0B

3.1 .1 PWM Command Interface

Signal Voltage	HIGH: min.3.3V, max.5.0V Low: min.0.0V, max.1.5V
Pulse Width	500us-2500us
Pulse Width for Position	1000us/1500us/2000us -50°/ 0°/+50°

3.1 .2 CAN Bus Command Interface

Baud-Rate	500Kbps
Node number	0 x25 (range 1 ~ 127, 0 is radio)
Communication	CAN Open

3.2 .1 PWM Position Feedback Signal

The Position Feedback signal (Pos FB) is an analog output signal with a voltage value which is directly related to the output shaft's angular position. Reference is **FB -** .

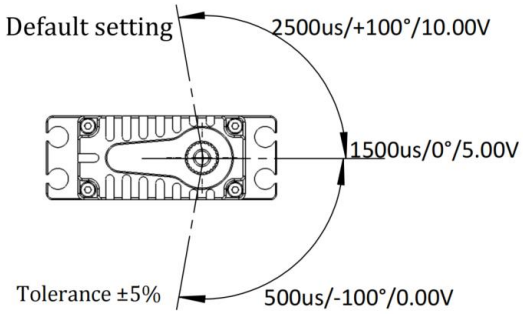

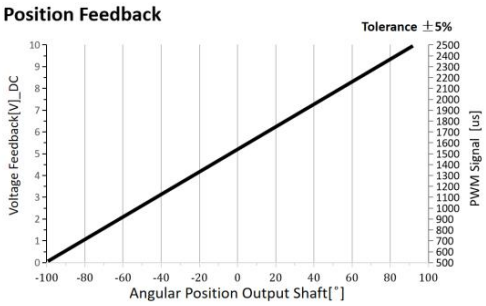

3.2.2 CANBUS Feedback

Integrated in the Bus protocol a Feedback Value, including the Angle position, Temperature, current value. Value read by sending request command. Provide the details of the bus in the document.

4. Electrical Connection (Leads length=300mm)

PWM Connection	Pin Assignment			
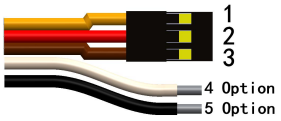	1	Orange	SIG	Command Signal
	2	Red	DC+	Supply Voltage
	3	Brown	DC-	Supply Ground
	4	White	FB +	Feedback Signal （Option）
	5	Black	FB -	Feedback Signal Ground （Option）
CANBUS Connection	**Pin Assignment**			
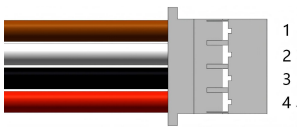	1	Brown	CAN_L	
	2	White	CAN_H	
	3	Black	DC-	Supply Ground
	4	Red	DC+	Supply Voltage

5.Accessories: Aluminum Servo Horn , Item No.: 0825.38

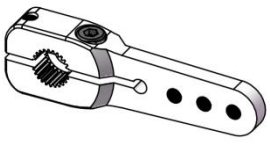

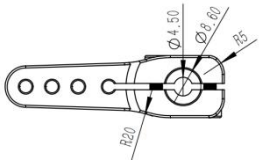

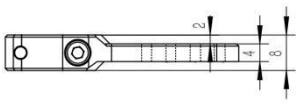

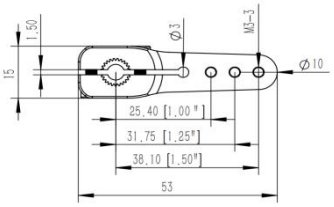

6. Item Number System

HP 20 - 826 - 24 - *

- HP 20: High Power, 20mm Class
- 826: Servo Type
- 24: DC24V
- *: Command

Command:
1:PWM
2:RS485
3:CAN Bus
4:PWM+RS485
5:PWM+CAN Bus