Technical Specification

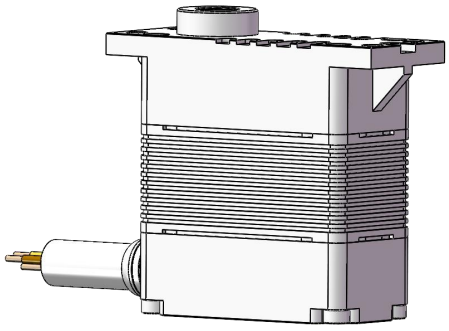

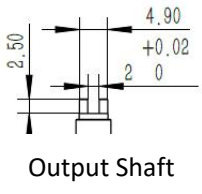

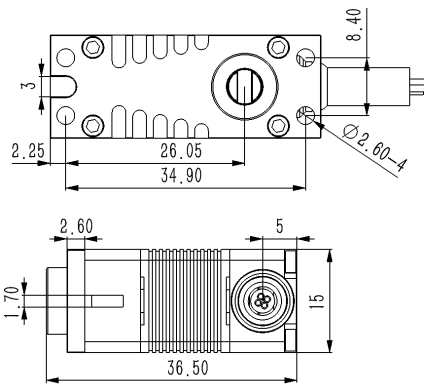

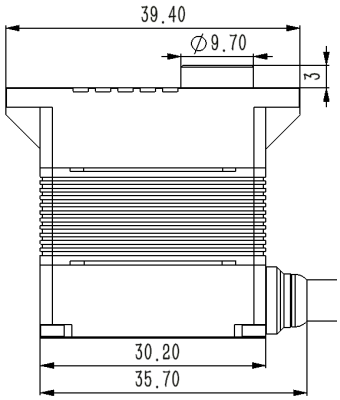

1. Operating Data

Rated Voltage	DC12V
Voltage Range	DC9V-15V
No-load current	50mA
Stalling Torque	8.0Kgf.cm
No load speed	550°/sec
Rated Speed	380°/sec
Stalling Current	1.5A
Rated Torque	4.0Kgf.cm
Rated Current	0.8A
Working Frequency	1520us/333Hz
Pulse Width	1000us-2000us
Temperature Range	-30℃.....+65℃
Default Travel Angle	±50°=100° Total angle
Gear Backlash	≤0.5°
Command Signal	PWM or CANOPEN 2.0B
Dimensions	30.2*15*36.5mm(±0.2mm)
Weight	45g±10%
Case Material	Aluminum Alloy
Motor Type	Brushless DC Motor
Gear Set Material	Hardened Steel
Position Sensor:	Contactless
Ball Bearing:	2BB

2. Performance

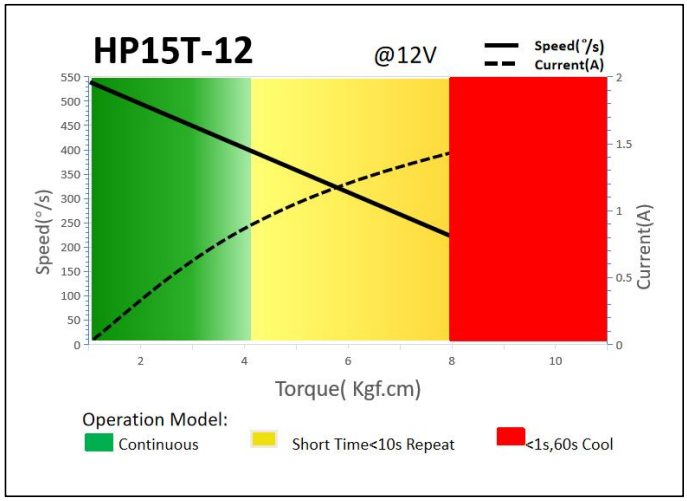

3.Command Signal

PWM or CANOPEN 2.0B

3.1 .1 PWM Command Interface

Signal Voltage	HIGH: min.3.3V, max.5.0V Low: min.0.0V, max.1.5V
Pulse Width	500us-2500us
Pulse Width for Position	1000us/1500us/2000us -50°/ 0°/+50°

3.1 .2 CAN Bus Command Interface

Baud-Rate	500Kbps
Node number	0 x25 (range 1 ~ 127, 0 is radio)
Communication	CAN Open

3.2 .1 PWM Position Feedback Signal

The Position Feedback signal (Pos FB) is an analog output signal with a voltage value which is directly related to the output shaft's angular position. Reference is **GND** .

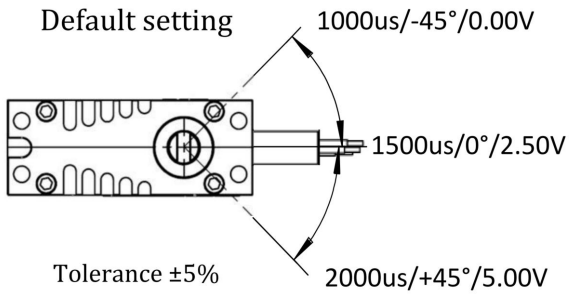

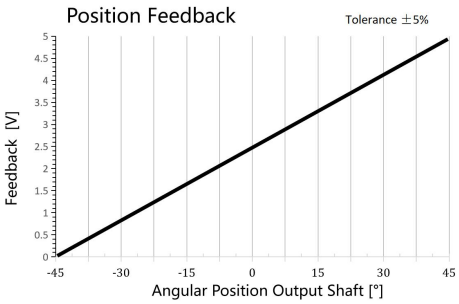

3.2.2 CANBUS Feedback

Integrated in the Bus protocol a Feedback Value, including the Angle position, Temperature, current value. Value read by sending request command. Provide the details of the bus in the document.

4. Electrical Connection (Open leads， Leads length=300mm)

PWM Connection	**Pin Assignment**			
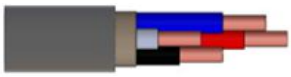	1	Red	**DC+**	Supply Voltage
	2	Black	**DC - （GND）**	Supply Ground,Signal Ground
	3	White	**SIG**	Command Signal
	4	Blue	**FB +**	Feedback Signal
CANBUS Connection	**Pin Assignment**			
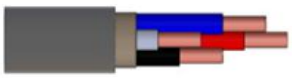	1	Red	**DC+**	Supply Voltage
	2	Black	**DC -**	Supply Ground
	3	White	**CAN_H**	
	4	Blue	**CAN_L**	

5. Item Number System

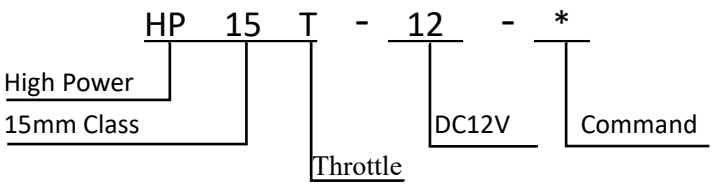

Command:
1:PWM
2: RS485
3:CAN Bus