THIS DRAWING IS UNPUBLISHED. RELEASED FOR PUBLICATION -
© COPYRIGHT - BY - ALL RIGHTS RESERVED.

LOC	DIST
-	-

REVISIONS

P	LTR	DESCRIPTION	DATE	DWN	APVD
	C	REV PER ECO 11-023512	11-22-11	CT	DH

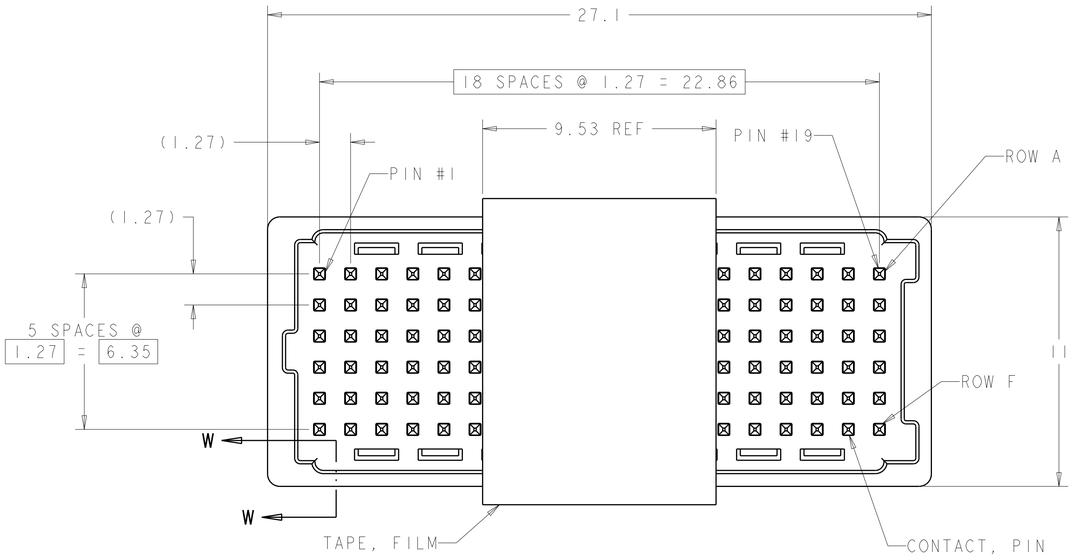

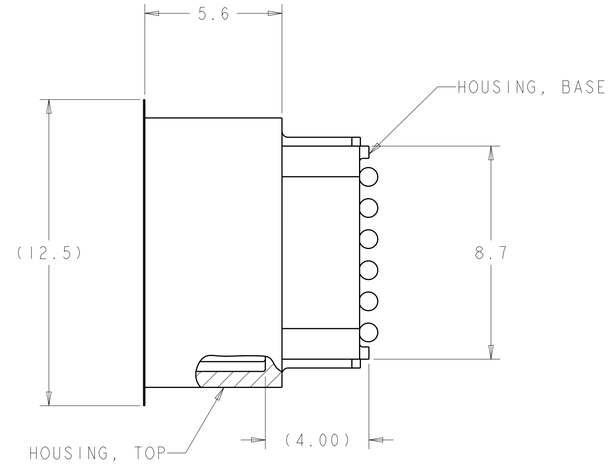

SECTION W-W

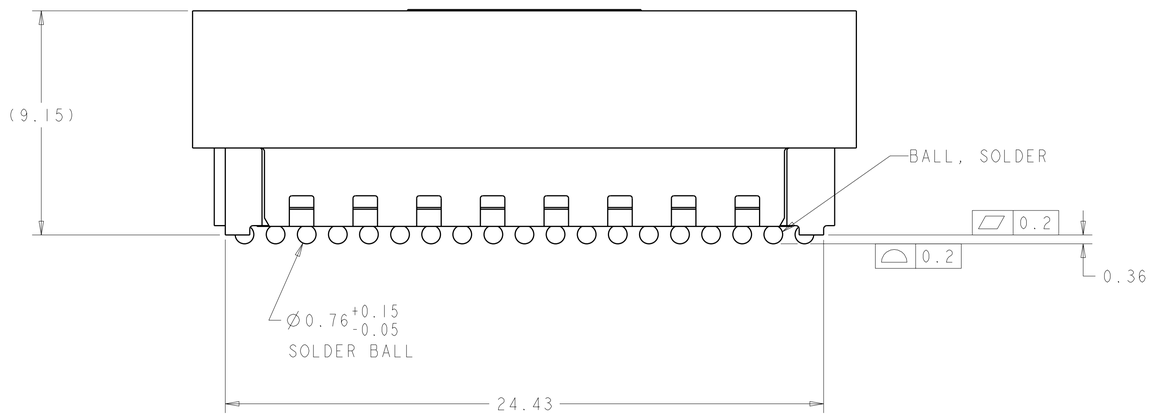

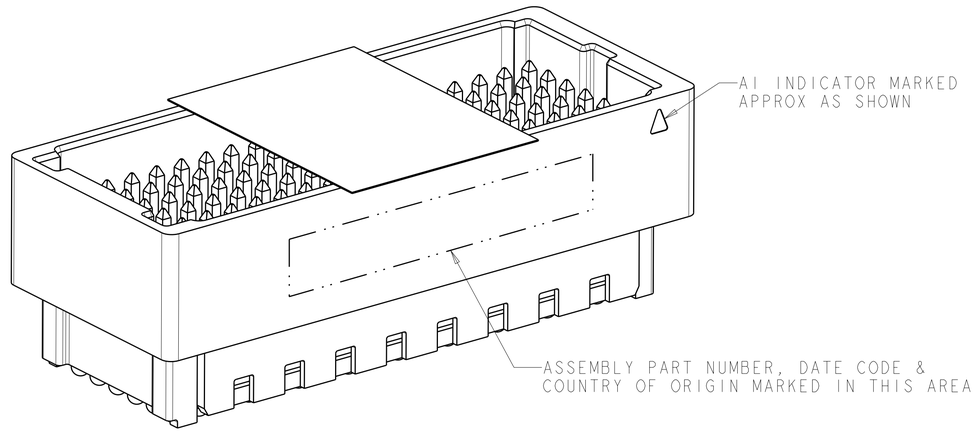

1. MATERIAL: HOUSINGS; LCP, COLOR-NATURAL
CONTACT; PHOSPHOR BRONZE
SOLDER BALL; SEE TABLE
TAPE, FILM; KAPTON WITH SILICON ADHESIVE

2. FINISH: CONTACT; GOLD (SEE TABLE) ON MATING AREA OVER
NICKEL ON ENTIRE CONTACT.

3. PRODUCT IS PACKAGED ON TAPE AND REELED.

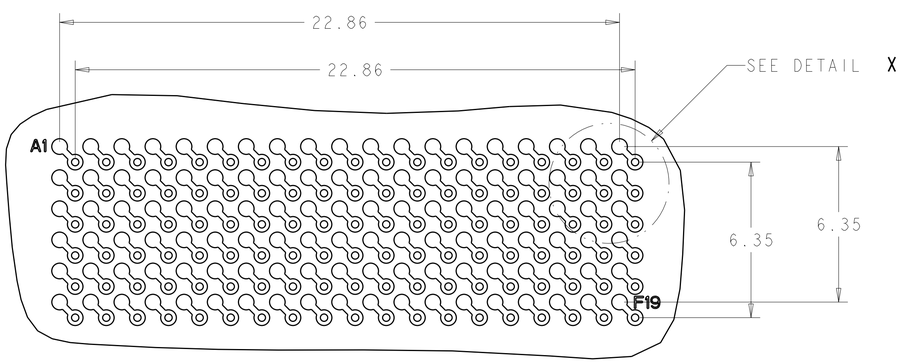

PCB LAYOUT (CONNECTOR SIDE)
SCALE - 8:1

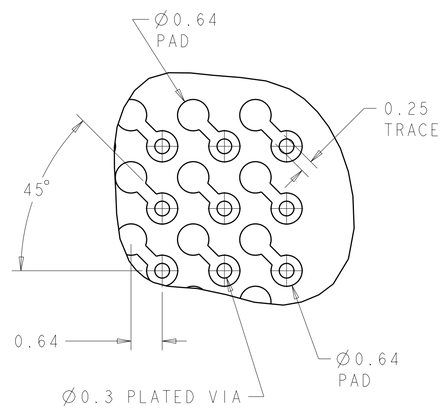

DETAIL X
SCALE 16:1

1-2102061-2	2102061-8	2102061-6	0.76µm	LEAD FREE PER SAC405	2102060-4
1-2102061-1	2102061-7	2102061-5	0.76µm	TIN LEAD	2102060-3
1-2102061-0	2102061-4	2102061-2	1.27µm	LEAD FREE PER SAC405	2102060-2
2102061-9	2102061-3	2102061-1	1.27µm	TIN LEAD	2102060-1
18mm STACK HEIGHT MATING CONNECTOR	12mm STACK HEIGHT MATING CONNECTOR	10mm STACK HEIGHT MATING CONNECTOR	GOLD PLATING THICKNESS	SOLDER BALL MATERIAL	PART NUMBER

THIS DRAWING IS A CONTROLLED DOCUMENT.

DIMENSIONS: mm

TOLERANCES UNLESS OTHERWISE SPECIFIED:
0 PLC ±-
1 PLC ±-
2 PLC ±0.13
3 PLC ±-
4 PLC ±-
ANGLES ±-

MATERIAL 1
FINISH 2

DWN G DOUTY	21JUL2009	
CHK K DOWHOWER	21JUL2009	
APVD K DOWHOWER	21JUL2009	
PRODUCT SPEC 108-2411		
APPLICATION SPEC 114-13279		
WEIGHT -		

TE Connectivity

NAME ASSEMBLY, PIN, 114 POSITION, MINI-BOX STACKING CONNECTIOR
-

SIZE	CAGE CODE	DRAWING NO	RESTRICTED TO
A1	00779	C-2102060	-

CUSTOMER DRAWING | SCALE 8:1 | SHEET 1 OF 1 | REV C