ASP-132424-01

REVISION

0	BC	E MINGS
5/7/2007	ECN-75629	
ISSUE FOR REVIEW		
A	BP	D TERRELL
8/7/2007	ECN-79039	
RELEASE FOR PRODUCTION		
B	TP	M TOWNSEND
12/31/2007	ECN-84649	
BOM: CHG ITEM 2 FROM T-1S60-03-L TO ASP-137246-01-P-L & CHG ITEM 4 FROM T-1G1-03-G TO ASP-137238-06-P-G		
C	GP	T LOZIER
4/28/2008	ECN-89798	
BOM: CHG ASP-137246-01-P-L TO T-1S60-03-L, CHG ASP-137238-06-P-G TO T-1G1-03-G; PLATING SPEC: CHG .000030 GOLD TO .000150 MATTE TIN.		
D	TW	S MANGELS
9/24/2008	ECN-97769	
BOM: ITEM 5: CHG FROM K-500-300 TO K-DOT-.276-.375-.005.		
E	TW	S MANGELS
10/9/2008	ECN-98672	
BOM: ITEM 4, CHG FROM T-1G1-03-G TO T-1G1-03-L.		

NOTES:
1. **64 POSITION QTH IS NON-STANDARD.**
2. **USE ASP-125450-03-B & ASP-132421-01-B.**
3. ⟨C⟩ REPRESENTS A CRITICAL DIMENSION.
4. MINIMUM PUSHOUT FORCE: .5 LB.
5. MINIMUM GROUND PLANE RETENTION: 1 LB.
6. PARTS TO BE MOLDED TO POSITION.
7. MAXIMUM VARIANCE OF .002[.05]. APPLIES TO SIGNAL OR GROUNDS INDEPENDENT OF THE GROUND OR SIGNAL PINS RESPECTIVELY.
8. GROUND PLANE PRESS HEIGHT MUST BE .003 [.07] LESS THAN THE MAXIMUM HEIGHT OR .002[.03] GREATER THAN THE MINIMUM HEIGHT OF SIGNAL PIN.
9. PARTS TO BE PACKAGED IN TRAYS.

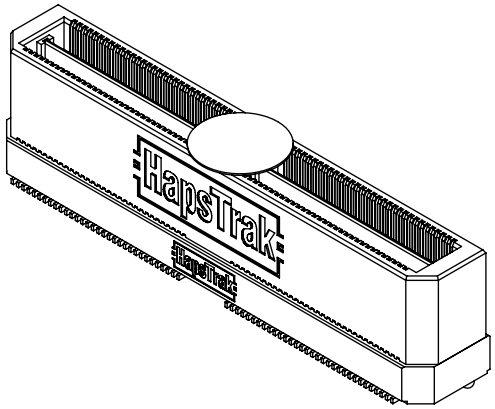

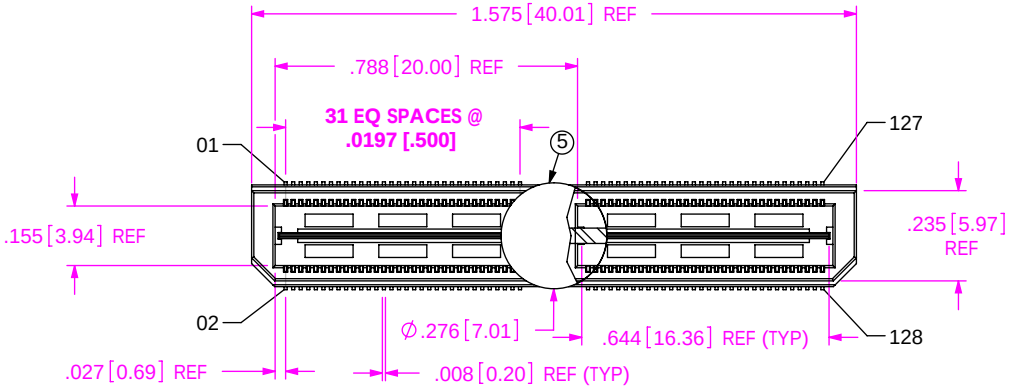

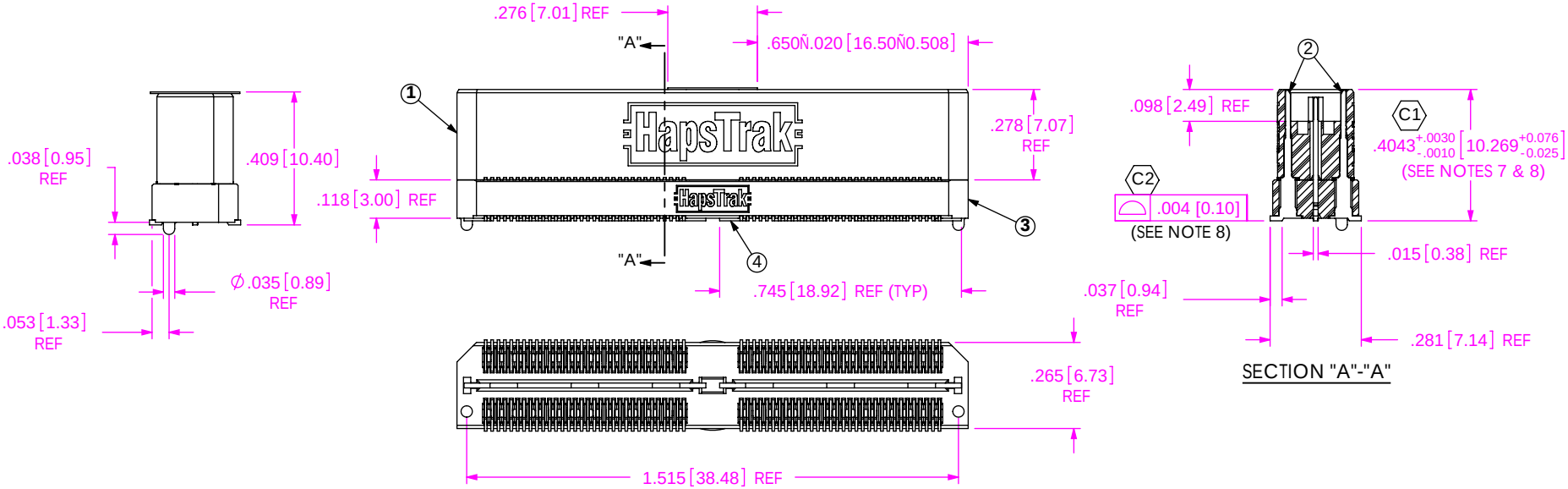

ACCEPTANCE OF DRAWING
☐ ACCEPTED WITH DEVIATIONS LISTED

DATE: ____
COMPANY: ____
CUSTOMER SIGNATURE ____
PRINTED NAME ____
PHONE No: ____
FAX No: ____

ITEM NO.	PART NUMBER	QUANTITY	MATERIAL
1	**ASP-125450-03-B**	1.0000	VECTRA E130i, COLOR: BLACK
2	T-1S60-03-L	**128.00**	PHOS BRONZE, 510 SPRING TEMPER
3	**ASP-132421-01-B**	1.0000	VECTRA E130i, COLOR: BLACK
4	E T-1G1-03-L	2.0000	PHOS BRONZE, 510 HALF HARD TEMPER
5	K-DOT-.276-.375-.005	1.0000	POLYIMIDE FILM (KAPTON)
6	TRAY-QXX002-PR-03-AP-T-A	1.0000	ANTI-STATIC BLACK HIPS

UNLESS OTHERWISE SPECIFIED, DIMENSIONS ARE IN INCHES.

TOLERANCES ARE:
DECIMALS
.XX: ±.01[.3]
.XXX: ±.005[.13]
.XXXX: ±.0020[.051]
ANGLES
2°

PROPRIETARY NOTE
THIS DOCUMENT CONTAINS INFORMATION CONFIDENTIAL AND PROPRIETARY TO SAMTEC, INC. AND SHALL NOT BE REPRODUCED OR TRANSFERRED TO OTHER DOCUMENTS OR DISCLOSED TO OTHERS OR USED FOR ANY PURPOSE OTHER THAN THAT WHICH IT WAS OBTAINED WITHOUT THE EXPRESSED WRITTEN CONSENT OF SAMTEC, INC.

samtec
520 PARK EAST BLVD, NEW ALBANY, IN 47150
PHONE: 812-944-6733 FAX: 812-948-5047
e-Mail: info@SAMTEC.com code: 55322

DO NOT SCALE DRAWING SHEET SCALE: 2:1

PLATING:
TERMINAL & GROUND PLANE
CONTACT AREA: .000010 GOLD OVER .000050 NICKEL
REMAINDER: .000150 MATTE TIN OVER .000050 NICKEL

F:\DWG\SW\ASP\132000\ASP-132424-01.SLDDRW

DESCRIPTION:
MODIFIED QTH ASSEMBLY

DWG. NO.
ASP-132424-01

BY: B. COOPER 5/7/2007 SHEET 1 OF 2

ASP-132424-01

REVISION E

RECOMMENDED PCB LAYOUT

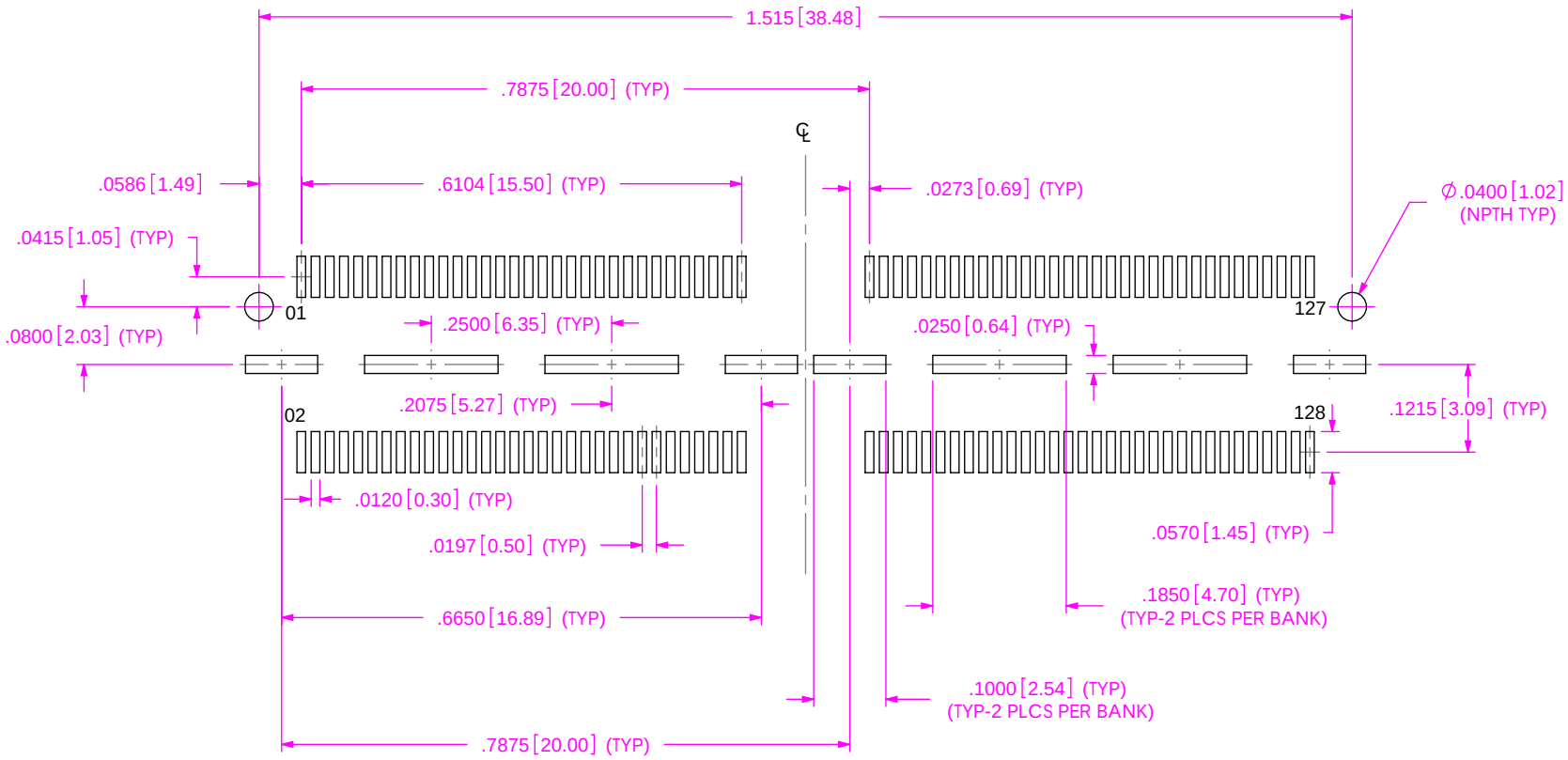

ALL DIMENSIONS ARE SYMMETRIC ABOUT THE CENTERLINE

PROPRIETARY NOTE

THIS DOCUMENT CONTAINS INFORMATION CONFIDENTIAL AND PROPRIETARY TO SAMTEC, INC. AND SHALL NOT BE REPRODUCED OR TRANSFERRED TO OTHER DOCUMENTS OR DISCLOSED TO OTHERS OR USED FOR ANY PURPOSE OTHER THAN THAT WHICH IT WAS OBTAINED WITHOUT THE EXPRESSED WRITTEN CONSENT OF SAMTEC, INC.

samtec

520 PARK EAST BLVD, NEW ALBANY, IN 47150
PHONE: 812-944-6733 FAX: 812-948-5047
e-Mail: info@SAMTEC.com code: 55322

SHEET SCALE: 2:1

DESCRIPTION: MODIFIED QTH ASSEMBLY

DWG. NO. ASP-132424-01

BY: B. COOPER 5/7/2007

SHEET 2 OF 2

F:\DWG\SW\ASP\132000\ASP-132424-01.SLDDRW