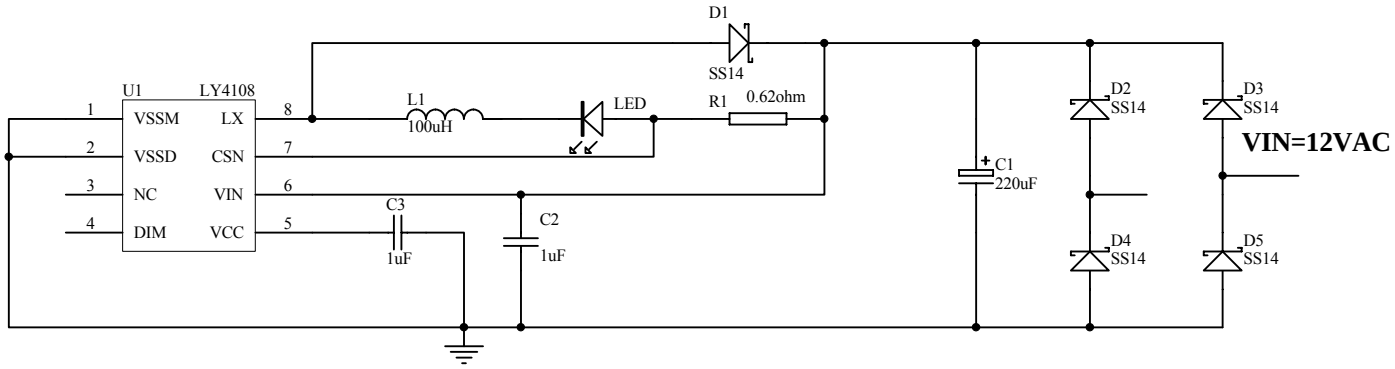
D1
SS14
U1
LY4108
1
VSSM
LX
8
2
VSSD
CSN
7
3
NC
VIN
6
4
DIM
VCC
5
L1
100uH
LED
R1
0.62ohm
C3
1uF
C2
1uF
C1
220uF
D2
SS14
D3
SS14
D4
SS14
D5
SS14
VIN=12VAC